CLASS NOTES ON

ELECTRICAL MEASUREMENTS & INSTRUMENTATION

PREPARED BY

G SEKHAR BABU

Assistant Professor

Department of Electrical & Electronics Engineering

Malla Reddy College of Engineering & Technology

Maisammaguda, Dhullapally, Secunderabad-500100

2020-21

DISCLAIMER

This document does not claim any originality and cannot be used as a substitute for prescribed textbooks. The matter presented here is prepared by the author for their respective teaching assignments by referring the text books and reference books. Further, this document is not intended to be used for commercial purpose and the committee members are not accountable for any issues, legal or otherwise, arising out of use of this document.

MALLA REDDY COLLEGE OF ENGINEERING AND TECHNOLOGY

III B.Tech EEEIISem	L	T/P/D	C
	3	- / -/-	3

(R18A0213) ELECTRICAL MEASUREMENTS &INSTRUMENTATION

COURSE OBJECTIVES:

- To introduce the basic principles of all Electrical measuringinstruments
- To deal with the measurement of voltage, current, Power factor, power, energy,etc.
- To understand the basic principle of Electronics and digitalmetering.

UNIT – I

INTRODUCTION TO MEASURING INSTRUMENTS: Classification of Instrument – deflecting, controlling and damping torques – Ammeters and Voltmeters – PMMC, moving iron, Electrostatic, induction type instruments – expression for the deflecting torque and control torque – Errors and compensations, extension of range ofinstruments.

UNIT – II

MEASURMENT OF POWER & ENERGY: Single phase dynamometer wattmeter – Expression for deflecting and control torques. Measurement of active and reactive power in balanced and unbalanced systems, power factor meters, induction type energy meter. Single & Three phase – driving and braking torques –errors and compensations.

UNIT – III

DC&AC BRIDGES Method of measuring low, medium and high resistance – sensitivity of wheat-stone's bridge –Kelvin's double bridge for measuring low resistance.Measurement of inductance-Maxwell's bridge, Hay's bridge, Anderson's bridge – Owens's bridge. Measurement of capacitance and loss angle – Desaunty's Bridge – Wien's bridge – ScheringBridge.Principle of CRO, Time, Frequency and phase angle measurements using CRO.

UNIT – IV

POTENTIOMETERS, INSTRUMENT TRANSFORMER & ELECTRONIC MEASUREMENTS: Principle and operation
of D.C. Crompton's potentiometer standardization – Measurement of unknown resistance, current, voltage.
A.C. Potentiometers: polar and coordinate type's standardization – application. CT and PT – Ratio and phase angle errors, Electronic Voltmeter, Millimeter, Wattmeter & energy meter.

UNIT – V

TRANSDUCERS: Definition of transducers, Classification of transducers, Advantages of Electrical transducers, Characteristics and choice of transducers; Principle operation of LVDT and capacitor transducers , LVDT Applications, Strain and its principle of operation, gauge factor, Thermistors, Thermocouples, Piezo electric transducers, photovoltaic, photo conductive cells, and photo diodes.

TEXT BOOKS:

1. A. K. Sawhney", "Electrical & Electronic Measurements", Dhanpat Rai & Co. Publications,2005.
2. "G. K. Banerjee", "Electrical & Electronic Measurements", PHI Learning Pvt. Ltd., 2nd Edition,2016
3. "S. C. Bhargava", "Electrical Measuring Instruments and Measurements ", BS Publications,2012.

REFERENCE BOOKS:

1. "R. K. Rajput", "Electrical & Electronic Measurements & Instrumentation", S. Chand and Company Ltd.,2007.
2. "Buckingham and Price", "Electrical Measurements", Prentice – Hall.1988.
3. "Reissland, M.U", "Electrical Measurements: Fundamentals, Concepts, Applications", New Age International (P) Limited Publishers, 1st Edition2010.
4. "E.W.GoldingandF.C.Widdis","ElectricalMeasurementsandmeasuringInstruments",fifthEdition, Wheeler Publishing, 2015.

COURSE OUTCOMES:

After completion of this course, the students will be able to

- Understanddifferenttypesofmeasuringinstrument,theirconstruction,operationandcharacteristics
- Identify the instruments suitable for typicalmeasurements

Apply the knowledge about transducers and instrument transformer to use them practically and effectively.

UNIT – I

INTRODUCTION TO MEASURING INSTRUMENTS:

Definition of instruments

An instrument is a device in which we can determine the magnitude or value of the quantity to be measured. The measuring quantity can be voltage, current, power and energy etc. Generally instruments are classified in to two categories.

Instrument

AbsoluteInstrument **SecondaryInstrument**

Absoluteinstrument

An absolute instrument determines the magnitude of the quantity to be measured in terms of the instrument parameter. This instrument is really used, because each time the value of the measuring quantities varies. So we have to calculate the magnitude of the measuring quantity, analytically which is time consuming. These types of instruments are suitable for laboratory use. Example: Tangentgalvanometer.

Secondaryinstrument

This instrument determines the value of the quantity to be measured directly. Generally these instruments are calibrated by comparing with another standard secondary instrument.

Examples of such instruments are voltmeter, ammeter and wattmeter etc. Practically secondary instruments are suitable for measurement.

Secondary instruments

Indicatinginstruments **Recording** **Integrating** **Electromechanically**
Indicating instruments

Indicatinginstrument

This instrument uses a dial and pointer to determine the value of measuring quantity. The pointer indication gives the magnitude of measuring quantity.

Recordinginstrument

This type of instruments records the magnitude of the quantity to be measured continuously over a specified period of time.

Integratinginstrument

This type of instrument gives the total amount of the quantity to be measured over a specified period of time.

Electromechanical indicatinginstrument

For satisfactory operation electromechanical indicating instrument, three forces are necessary. They are

(a) Deflectingforce

(b) Controlling force

(c)Dampingforce

Deflectingforce

When there is no input signal to the instrument, the pointer will be at its zero position. To deflect the pointer from its zero position, a force is necessary which is known as deflecting force. A system which produces the deflecting force is known as a deflecting system. Generally a deflecting system converts an electrical signal to a mechanical force.

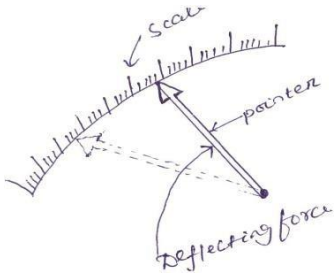

Fig. 1.1 Pointer scale

Magnitudeeffect

When a current passes through the coil (Fig.1.2), it produces a imaginary bar magnet. When a soft-iron piece is brought near this coil it is magnetized. Depending upon the current direction the poles are produced in such a way that there will be a force of attraction between the coil and the soft iron piece. This principle is used in moving iron attraction typeinstrument.

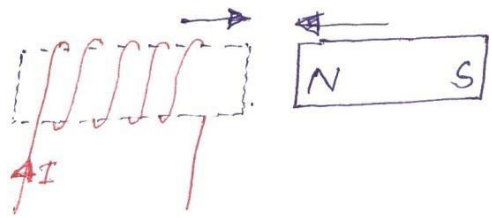

Fig. 1.2

If two soft iron pieces are place near a current carrying coil there will be a force of repulsion between the two soft iron pieces. This principle is utilized in the moving iron repulsion type instrument.

Force between a permanent magnet and a current carryingcoil

When a current carrying coil is placed under the influence of magnetic field produced by a permanent magnet and a force is produced between them. This principle is utilized in the moving coil type instrument.

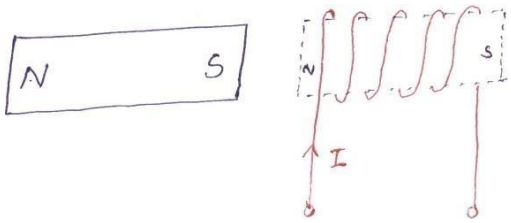

Fig. 1.3

Force between two current carryingcoil

When two current carrying coils are placed closer to each other there will be a force of repulsion between them. If one coil is movable and other is fixed, the movable coil will move away from the fixed one. This principle is utilized in electrodynamometer type instrument.

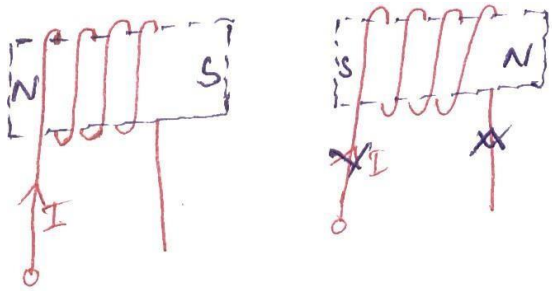

Fig. 1.4

Controllingforce

To make the measurement indicated by the pointer definite (constant) a force is necessary which will be acting in the opposite direction to the deflecting force. This force is known as controlling force. A system which produces this force is known as a controlled system. When the external signal to be measured by the instrument is removed, the pointer should return back to the zero position. This is possibly due to the controlling force and the pointer will be indicating a steady value when the deflecting torque is equal to controlling torque.

$$T_d = T_c \tag{1.1}$$

Springcontrol

Two springs are attached on either end of spindle (Fig. 1.5).The spindle is placed in jewelled bearing, so that the frictional force between the pivot and spindle will be minimum. Two springs are provided in opposite direction to compensate the temperature error. The spring is made of phosphorous bronze.

When a current is supply, the pointer deflects due to rotation of the spindle. While spindle is rotate, the spring attached with the spindle will oppose the movements of the pointer. The torque produced by the spring is directly proportional to the pointer deflection θ.

$$T_C \propto \theta \tag{1.2}$$

The deflecting torque produced T_d proportional to 'I'. When $T_C = T_d$, the pointer will come to a steady position. Therefore

$$\theta \propto I \tag{1.3}$$

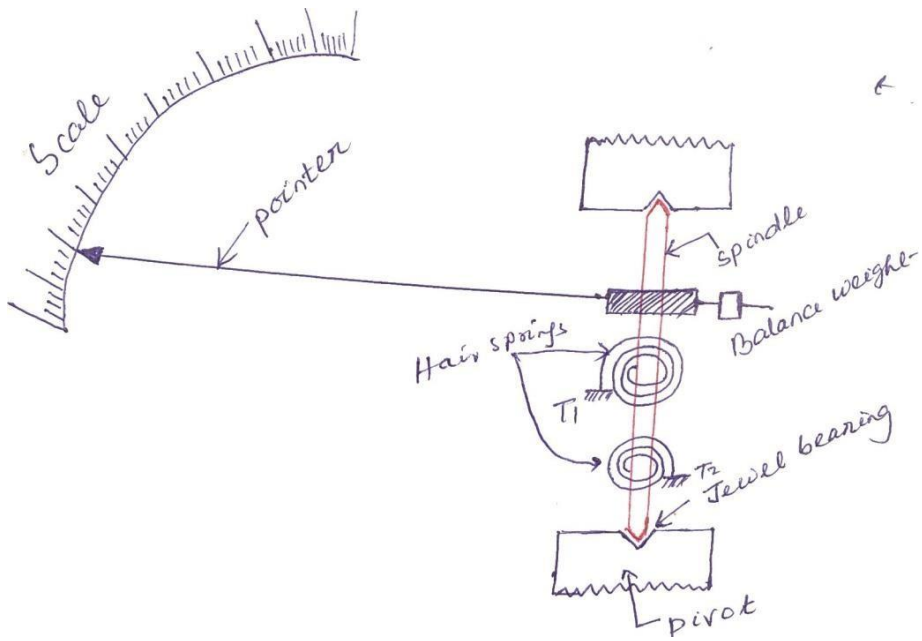

Fig. 1.5

Since, $\theta$and I are directly proportional to the scale of such instrument which uses spring controlled is uniform.

Dampingforce

The deflection torque and controlling torque produced by systems are electro mechanical. Due to inertia produced by this system, the pointer oscillates about it final steady position before coming to rest. The time required to take the measurement is more. To damp out the oscillation is quickly, a damping force is necessary. This force is produced by differentsystems.

(a) Air frictiondamping
(b) Fluid frictiondamping
(c) Eddy currentdamping

Air frictiondamping

The piston is mechanically connected to a spindle through the connecting rod (Fig. 1.6). The pointer is fixed to the spindle moves over a calibrated dial. When the pointer oscillates in clockwise direction, the piston goes inside and the cylinder gets compressed. The air pushes the piston upwards and the pointer tends to move in anticlockwise direction.

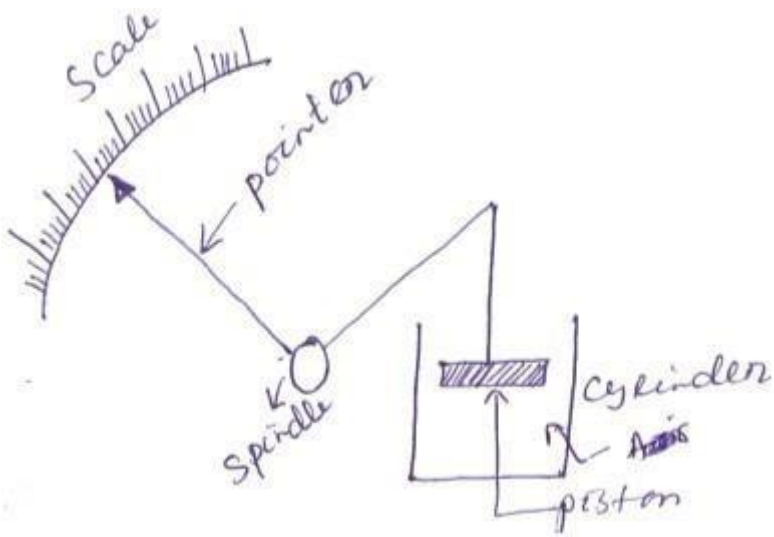

Fig. 1.6

If the pointer oscillates in anticlockwise direction the piston moves away and the pressure of the air inside cylinder gets reduced. The external pressure is more than that of the internal pressure. Therefore the piston moves down wards. The pointer tends to move in clock wise direction.

Eddy currentdamping

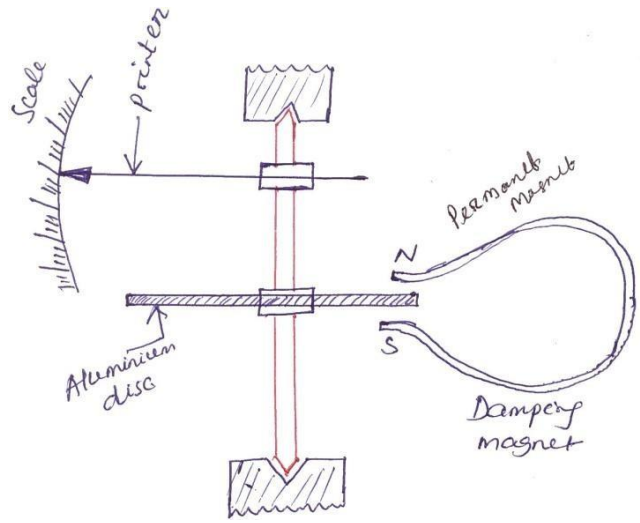

Fig. 1.6 Disc type

An aluminum circular disc is fixed to the spindle (Fig. 1.6). This disc is made to move in the magnetic field produced by a permanent magnet.

When the disc oscillates it cuts the magnetic flux produced by damping magnet. An emf is induced in the circular disc by faradays law. Eddy currents are established in the disc since it has several closed paths. By Lenz's law, the current carrying disc produced a force in a direction opposite to oscillating force. The damping force can be varied by varying the projection of the magnet over the circular disc.

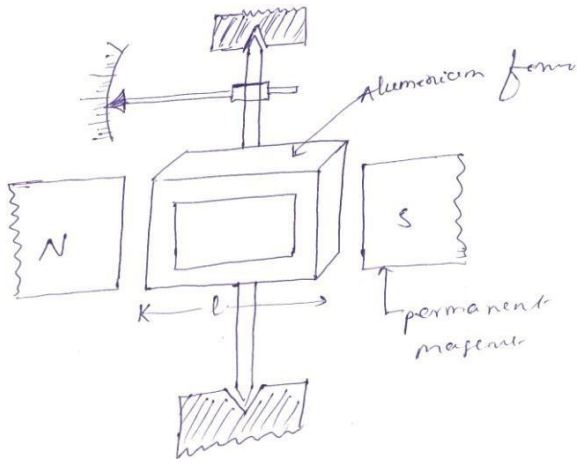

Fig. 1.6 Rectangular type

Permanent Magnet Moving Coil (PMMC)instrument

One of the most accurate type of instrument used for D.C. measurements is PMMC instrument.

Construction: A permanent magnet is used in this type instrument. Aluminum former is provided in the cylindrical in between two poles of the permanent magnet (Fig. 1.7). Coils are wound on the aluminum former which is connected with the spindle. This spindle is supported with jeweled bearing. Two springs are attached on either end of the spindle. The terminals of the moving coils are connected to the spring. Therefore the current flows through spring 1, moving coil and spring 2.

Damping: Eddy current damping is used. This is produced by aluminum former.

Control: Spring control is used.

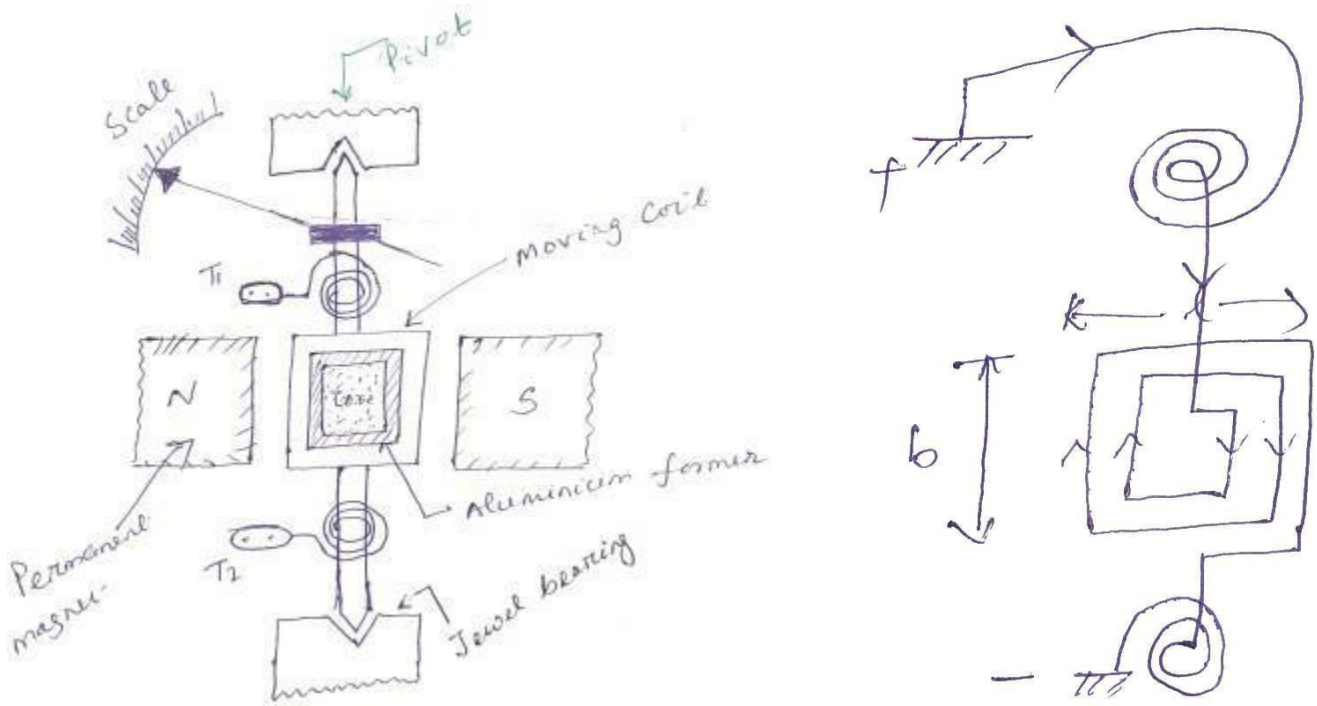

Fig. 1.7

Principle of operation

When D.C. supply is given to the moving coil, D.C. current flows through it. When the current carrying coil is kept in the magnetic field, it experiences a force. This force produces a torque and the former rotates. The pointer is attached with the spindle. When the former rotates, the pointer moves over the calibrated scale. When the polarity is reversed a torque is produced in the opposite direction. The mechanical stopper does not allow the deflection in the opposite direction. Therefore the polarity should be maintained with PMMCinstrument.

If A.C. is supplied, a reversing torque is produced. This cannot produce a continuous deflection. Therefore this instrument cannot be used in A.C.

Torque developed by PMMC

Let T_d =deflecting torque

T_C = controlling torque

θ= angle of deflection

K=spring constant

b=width of the coil

l=height of the coil or length ofcoil N=No.

ofturns

I=current B=Fluxdensity

A=area of the coil

The force produced in the coil is given by

$F = BIL \sin\theta$

When $\theta = 90^{\circ}$ (1.4)

For N turns, $F = NBIL$ (1.5)

Torque produced $T_d = F \times \perp_r$ distance (1.6)

$T_d = NBIL \times b = BINA$ (1.7)

$T_d = BANI$ (1.8)

$T_d \propto I$ (1.9)

Advantages

- ✓ Torque/weight ishigh
- ✓ Power consumption isless
- ✓ Scale isuniform
- ✓ Damping is veryeffective
- ✓ Since operating field is very strong, the effect of stray field isnegligible
- ✓ Range of instrument can beextended

Disadvantages

- ✓ Use only forD.C.
- ✓ Cost ishigh
- ✓ Error is produced due to ageing effect ofPMMC
- ✓ Friction and temperature error are present

Extension of range of PMMCinstrument Case-

I:Shunt

A low shunt resistance connected in parrel with the ammeter to extent the range of current. Large current can be measured using low current rated ammeter by using a shunt.

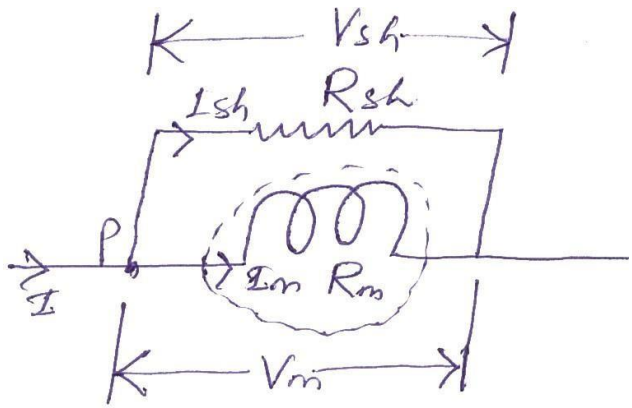

Fig. 1.8

Let R_m =Resistance of meter

R_{sh}=Resistance of shunt I_m

= Current through meter

I_{sh}=current through shunt I=

current to bemeasure

$\therefore V_m = V_{sh}$ (1.10)

$I_m R_m = I_{sh} R_{sh}$

$$\frac{I_m}{I_{sh}} = \frac{R_{sh}}{R_m} \quad (1.11)$$

Apply KCL at 'P' $I = I_m + I_{sh}$ (1.12)

Eq^n (1.12) ÷ by I_m

$$\frac{I}{I_m} = 1 + \frac{I_{sh}}{I_m} \quad (1.13)$$

$$\frac{I}{I_m} = 1 + \frac{R_m}{R_{sh}} \qquad (1.14)$$

$$\therefore I = I_m\left(1 + \frac{R_m}{R_{sh}}\right) \qquad (1.15)$$

$\left(1 + \frac{R_m}{R_{sh}}\right)$ is called multiplication factor

Shunt resistance is made of manganin. This has least thermoelectric emf. The change is resistance, due to change in temperature is negligible.

Case (II): Multiplier

A large resistance is connected in series with voltmeter is called multiplier (Fig. 1.9). A large voltage can be measured using a voltmeter of small rating with a multiplier.

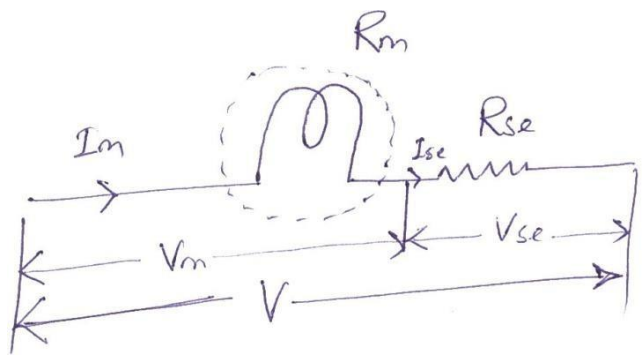

Fig. 1.9

Let R_m =resistance of meter

R_{se} =resistance of multiplier

V_m =Voltage across meter

V_{se} = Voltage across seriesresistance

V= voltage to bemeasured

$$I_m = I_{se} \qquad (1.16)$$

$$V_m = V_{se}\frac{R_m}{R_{se}} \qquad (1.17)$$

$$\therefore \frac{V_{se}}{V_m} = \frac{R_{se}}{R_m} \qquad (1.18)$$

Apply KVL, $V = V_m + V_{se}$ (1.19)

Eq^n (1.19) $\div V_m$

$$\frac{V}{V_m} = 1 + \frac{V_{se}}{V_m} = 1 + \left(\frac{R_{se}}{R_m}\right) \quad (1.20)$$

$$\therefore V = V_m\left(1 + \frac{R_{se}}{R_m}\right) \quad (1.21)$$

$\left(1 + \frac{R_{se}}{R_m}\right) \rightarrow$ Multiplication factor

Moving Iron (MI)instruments

One of the most accurate instrument used for both AC and DC measurement is moving iron instrument. There are two types of moving iron instrument.

- Attractiontype
- Repulsiontype

Attraction type M.I.instrument

<u>Construction</u>: The moving iron fixed to the spindle is kept near the hollow fixed coil (Fig. 1.10). The pointer and balance weight are attached to the spindle, which is supported with jeweled bearing. Here air friction damping is used.

<u>Principle of operation</u>

The current to be measured is passed through the fixed coil. As the current is flow through the fixed coil, a magnetic field is produced. By magnetic induction the moving iron gets magnetized. The north pole of moving coil is attracted by the south pole of fixed coil. Thus the deflecting force is produced due to force of attraction. Since the moving iron is attached with the spindle, the spindle rotates and the pointer moves over the calibrated scale. But the force of attraction depends on the current flowing through the coil.

<u>Torque developed by M.I</u>

Let 'θ' be the deflection corresponding to a current of 'i' amp

Let the current increases by di, the corresponding deflection is '$\theta + d\theta$'

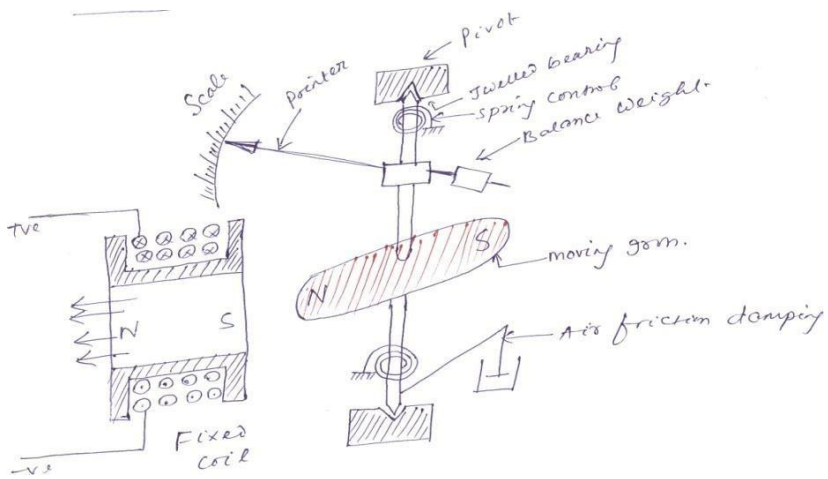

Fig. 1.10

There is change in inductance since the position of moving iron change w.r.t the fixed electromagnets.

Let the new inductance value be 'L+dL'. The current change by 'di' is dt seconds.

Let the emf induced in the coil be 'e' volt.

$$e = \frac{d}{dt}(Li) = L\frac{di}{dt} + i\frac{dL}{dt} \qquad (1.22)$$

Multiplying by 'idt' in equation (1.22)

$$e \times idt = L\frac{di}{dt} \times idt + i\frac{dL}{dt} \times idt \qquad (1.23)$$

$$e \times idt = Lidi + i^2 dL \qquad (1.24)$$

Eq^n (1.24) gives the energy is used in to two forms. Part of energy is stored in the inductance. Remaining energy is converted in to mechanical energy which produces deflection.

Fig. 1.11

Change in energy stored=Final energy-initial energy stored

$$=\frac{1}{2}(L+dL)(i+di)^2-\frac{1}{2}Li^2$$

$$=\frac{1}{2}\{(L+dL)(i^2+di^2+2idi)-Li^2\}$$

$$=\frac{1}{2}\{(L+dL)(i^2+2idi)-Li^2\}$$

$$=\frac{1}{2}\{Li^2+2Lidi+i^2dL+2ididL-Li^2\}$$

$$=\frac{1}{2}\{2Lidi+i^2dL\}$$

$$=Lidi+\frac{1}{2}i^2dL$$

Mechanical work to move the pointer by $d\theta$

$$=T_d\,d\theta \tag{1.25}$$

By law of conservation of energy,

Electrical energy supplied=Increase in stored energy+ mechanical work done. (1.26)

Input energy= Energy stored + Mechanical energy

$$Lidi+i^2dL=Lidi+\frac{1}{2}i^2dL+T_d\,d\theta$$

$$\frac{1}{2}i^2dL=T_d\,d\theta \tag{1.27}$$

(1.28)

$$T_d=\frac{1}{2}i^2\frac{dL}{d\theta} \tag{1.29}$$

At steady state condition $T_d=T_C$

$$\frac{1}{2}i^2\frac{dL}{d\theta}=K\theta \tag{1.30}$$

$$\theta=\frac{1}{2K}i^2\frac{dL}{d\theta} \tag{1.31}$$

$$\theta\propto i^2 \tag{1.32}$$

When the instruments measure AC, $\theta\propto i^2_{rms}$

Scale of the instrument is non uniform.

Advantages

- ✓ MI can be used in AC andDC
- ✓ It ischeap
- ✓ Supply is given to a fixed coil, not in movingcoil.
- ✓ Simpleconstruction
- ✓ Less frictionerror.

Disadvantages

- ✓ It suffers from eddy current and hysteresiserror
- ✓ Scale is notuniform
- ✓ It consumed morepower
- ✓ Calibration is different for AC and DCoperation

Repulsion type moving ironinstrument

Construction: The repulsion type instrument has a hollow fixed iron attached to it (Fig. 1.12). The moving iron is connected to the spindle. The pointer is also attached to the spindle in supported with jeweled bearing.

Principle of operation: When the current flows through the coil, a magnetic field is produced by it. So both fixed iron and moving iron are magnetized with the same polarity, since they are kept in the same magnetic field. Similar poles of fixed and moving iron get repelled. Thus the deflecting torque is produced due to magnetic repulsion. Since moving iron is attached to spindle, the spindle will move. So that pointer moves over the calibratedscale.

Damping: Air friction damping is used to reduce the oscillation.

Control: Spring control is used.

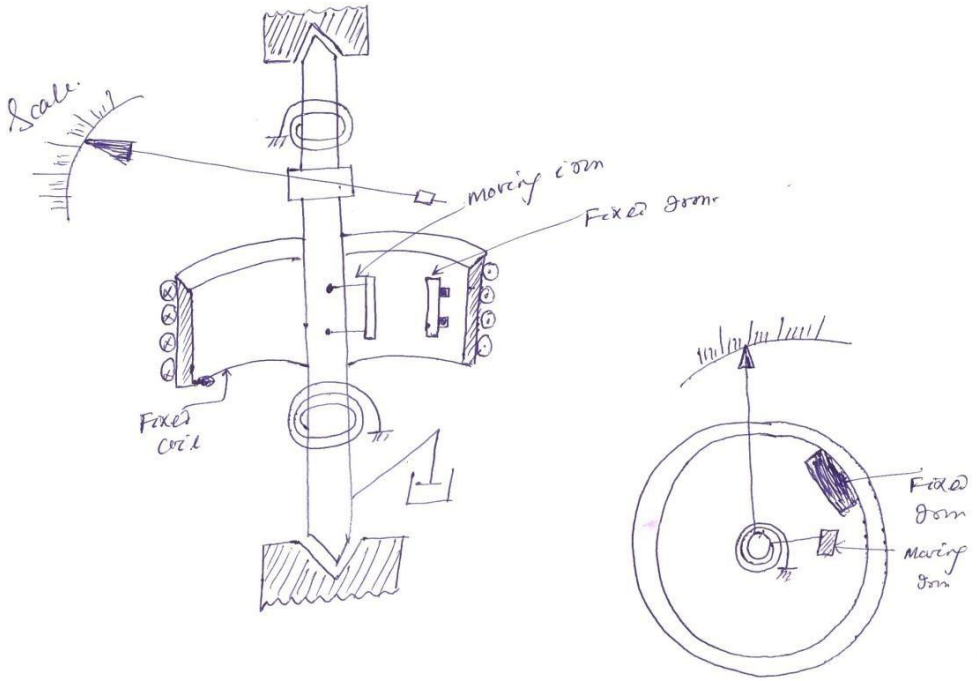

Fig. 1.12

Dynamometer (or) Electromagnetic moving coil instrument(EMMC)

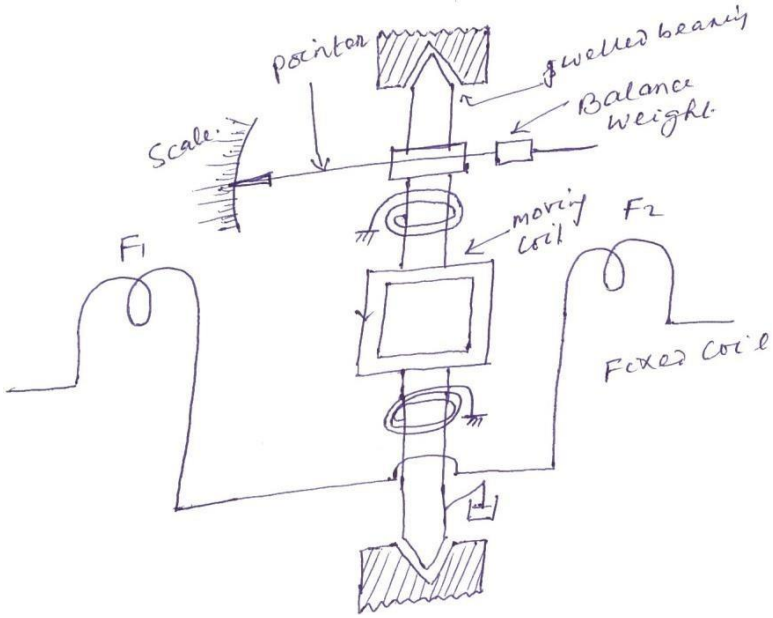

Fig. 1.13

This instrument can be used for the measurement of voltage, current and power. The difference between the PMMC and dynamometer type instrument is that the permanent magnet is replaced by an electromagnet.

Construction: A fixed coil is divided in to two equal half. The moving coil is placed between the two half of the fixed coil. Both the fixed and moving coils are air cored. So that the hysteresis effect will be zero. The pointer is attached with the spindle. In a non metallic former the moving coil is wounded.

Control: Spring control is used.

Damping: Air friction damping is used.

Principle of operation:

When the current flows through the fixed coil, it produced a magnetic field, whose flux density is proportional to the current through the fixed coil. The moving coil is kept in between the fixed coil. When the current passes through the moving coil, a magnetic field is produced by this coil.

The magnetic poles are produced in such a way that the torque produced on the moving coil deflects the pointer over the calibrated scale. This instrument works on AC and DC. When AC voltage is applied, alternating current flows through the fixed coil and moving coil. When the current in the fixed coil reverses, the current in the moving coil also reverses. Torque remains in the same direction. Since the current i_1 and i_2 reverse simultaneously. This is because the fixed and moving coils are either connected in series or parallel.

Torque developed by EMMC

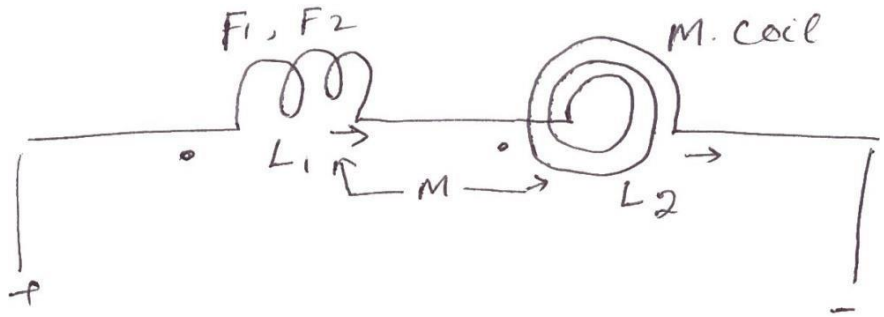

Fig. 1.14

Let

L_1=Self inductance of fixed coil L_2=

Self inductance of moving coil

M=mutual inductance between fixed coil and moving coil

i_1=current through fixed coil

i_2=current through moving coil

Total inductance of system,

$$L_{total} = L_1 + L_2 + 2M \tag{1.33}$$

But we know that in case of M.I

$$T_d = \frac{1}{2} i^2 \frac{d(L)}{d\theta} \tag{1.34}$$

$$T_d = \frac{1}{2} i^2 \frac{d}{d\theta}(L_1 + L_2 + 2M) \tag{1.35}$$

The value of L_1 and L_2 are independent of 'θ' but 'M' varies with θ

$$T_d = \frac{1}{2} i^2 \times 2 \frac{dM}{d\theta} \tag{1.36}$$

$$T_d = i^2 \frac{dM}{d\theta} \tag{1.37}$$

If the coils are not connected in series $i_1 \neq i_2$

$$\therefore T_d = \frac{dM}{d\theta} i_1 i_2 \tag{1.38}$$

$$T_C = T_d \tag{1.39}$$

$$\therefore \theta = \frac{i_1 i_2}{K} \frac{dM}{d\theta} \tag{1.40}$$

Hence the deflection of pointer is proportional to the current passing through fixed coil and moving coil.

Extension of EMMCinstrument Case-I

Ammeterconnection

Fixed coil and moving coil are connected in parallel for ammeter connection. The coils are designed such that the resistance of each branch is same.

Therefore

$I_1 = I_2 = I$

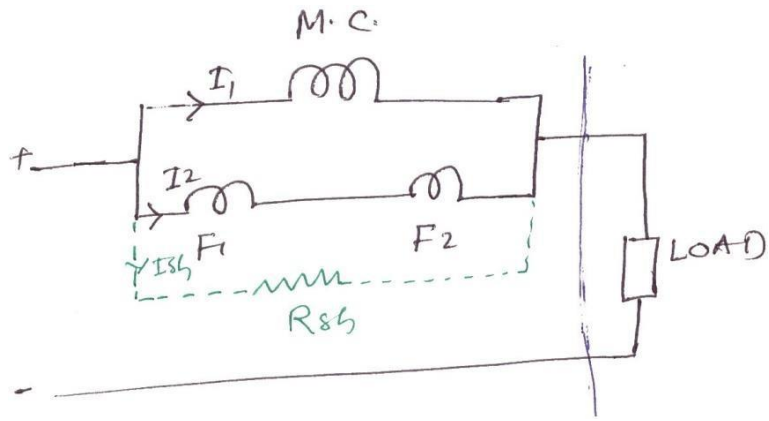

Fig. 1.15

To extend the range of current a shunt may be connected in parallel with the meter. The value R_{sh} is designed such that equal current flows through moving coil and fixed coil.

$$\therefore T_d = I_1 I_2 \frac{dM}{d\theta} \quad (1.41)$$

$$\text{Or} \therefore T_d = I^2 \frac{dM}{d\theta} \quad (1.42)$$

$$T_C = K\theta \quad (1.43)$$

$$\theta = \frac{I^2}{K}\frac{dM}{d\theta} \quad (1.44)$$

$$\therefore \theta \propto I^2 \text{ (Scale isnotuniform)} \quad (1.45)$$

Case-II Voltmeter connection

Fixed coil and moving coil are connected in series for voltmeter connection. A multiplier may be connected in series to extent the range of voltmeter.

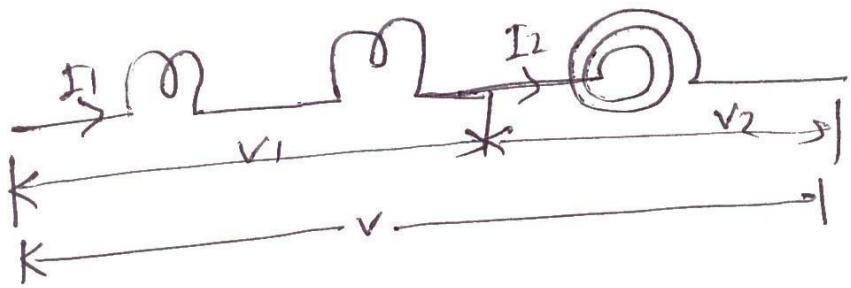

Fig. 1.16

$$I_1 = \frac{V_1}{Z_1}, \quad I_2 = \frac{V_2}{Z_2} \tag{1.46}$$

$$T_d = \frac{V_1}{Z_1} \times \frac{V_2}{Z_2} \times \frac{dM}{d\theta} \tag{1.47}$$

$$T_d = \frac{K_1 V}{Z_1} \times \frac{K_2 V}{Z_2} \times \frac{dM}{d\theta} \tag{1.48}$$

$$T_d = \frac{KV^2}{Z_1 Z_2} \times \frac{dM}{d\theta} \tag{1.49}$$

$$T_d \propto V^2 \tag{1.50}$$

$$\therefore \theta \propto V^2 \quad \text{(Scale innotuniform)} \tag{1.51}$$

Case-III As w**attmeter**

When the two coils are connected to parallel, the instrument can be used as a wattmeter. Fixed coil is connected in series with the load. Moving coil is connected in parallel with the load. The moving coil is known as voltage coil or pressure coil and fixed coil is known as current coil.

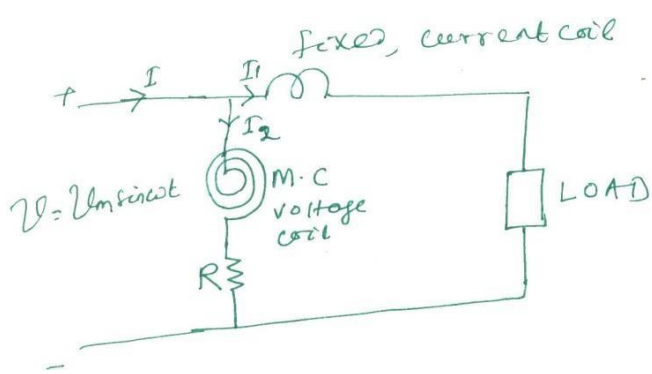

Fig. 1.17

Assume that the supply voltage is sinusoidal. If the impedance of the coil is neglected in comparison with the resistance ‘R’. The current,

$$I_2 = \frac{v_m \sin wt}{R} \tag{1.52}$$

Let the phase difference between the currents I_1 and I_2 is ϕ

$$I_1 = I_m \sin(wt - \phi) \tag{1.53}$$

$$T_d = I_1 I_2 \frac{dM}{d\theta} \tag{1.54}$$

$$T_d = I_m \frac{\sin(wt-\phi)}{R} \times V_m \sin wt \frac{dM}{d\theta} \tag{1.55}$$

$$T_d = \frac{1}{R}(I_m V_m \sin wt \sin(wt-\phi)) \frac{dM}{d\theta} \tag{1.56}$$

$$T_d = \frac{1}{R} I_m V_m \sin wt.\sin(wt-\phi) \frac{dM}{d\theta} \tag{1.57}$$

The average deflecting torque

$$(T_d)_{avg} = \frac{1}{2\Pi} \int_0^{2\Pi} T_d \, d(wt) \times \left(\frac{dM}{d\theta} \right) \tag{1.58}$$

$$(T_d)_{avg} = \frac{1}{2\Pi} \times \frac{1}{R} \int_0^{2\Pi} V_m I_m \sin wt.\sin(wt-\phi) \, d(wt) \tag{1.59}$$

$$(T_{d\,avg}) = \frac{V_m I_m}{2 \times 2\Pi} \times \frac{1}{R} \frac{dM}{d\theta} \times \left[\int_0^{2\Pi} \{\cos\phi - \cos(2wt - \phi)\} dwt \right] \tag{1.60}$$

$$(T_{d\,avg}) = \frac{V_m I_m}{4\Pi R} \times \frac{dM}{d\theta} \left[\int_0^{2\Pi} \cos\phi . dwt - \int_0^{2\Pi} \cos(2wt - \phi).dwt \right] \tag{1.61}$$

$$(T_{d\,avg}) = \frac{V_m I_m}{4\Pi R} \times \frac{dM}{d\theta} \left[\cos\phi [wt]_0^{2\Pi} \right] \tag{1.62}$$

$$(T_{d\,avg}) = \frac{V_m I_m}{4\Pi R} \times \frac{dM}{d\theta} \left[\cos\phi (2\Pi - 0) \right] \tag{1.63}$$

$$(T_{d\,avg}) = \frac{V_m I_m}{2} \times \frac{1}{R} \times \frac{dM}{d\theta} \times \cos\phi \tag{1.64}$$

$$(T_d)_{avg} = V_{rms} \times I_{rms} \times \cos\phi \times \frac{1}{R} \times \frac{dM}{d\theta} \tag{1.65}$$

$$(T_d)_{avg} \propto KVI\cos\phi \quad (1.66)$$

$$T_C \propto \theta \quad (1.67)$$

$$\theta \propto KVI\cos\phi \quad (1.68)$$

$$\theta \propto VI\cos\phi \quad (1.69)$$

Advantages

- ✓ It can be used for voltmeter, ammeter andwattmeter
- ✓ Hysteresis error isnill
- ✓ Eddy current error isnill
- ✓ Damping iseffective
- ✓ It can be measure correctively and accurately the rms value of thevoltage

Disadvantages

- ✓ Scale is notuniform
- ✓ Power consumption is high(because of high resistance)
- ✓ Cost ismore
- ✓ Error is produced due to frequency, temperature and strayfield.
- ✓ Torque/weight is low.(Because field strength is verylow)

Errors in PMMC

- ✓ The permanent magnet produced error due to ageing effect. By heat treatment, this error can beeliminated.
- ✓ The spring produces error due to ageing effect. By heat treating the spring the error can beeliminated.
- ✓ When the temperature changes, the resistance of the coil vary and the spring also produces error in deflection. This error can be minimized by using a spring whose temperature co-efficient is verylow.

Difference between attraction and repulsion typeinstrument

An attraction type instrument will usually have a lower inductance, compare to repulsion type instrument. But in other hand, repulsion type instruments are more suitable for economical production in manufacture and nearly uniform scale is more easily obtained. They are therefore much more common than attraction type.

Characteristics of meter

Full scale deflection current(I_{FSD})

The current required to bring the pointer to full-scale or extreme right side of the instrument is called full scale deflection current. It must be as small as possible. Typical value is between 2 μA to 30mA.

Resistance of the coil(R_m)

This is ohmic resistance of the moving coil. It is due to ρ, L and A. For an ammeter this should be as small as possible.

Sensitivity of themeter(S)

$$S=\frac{1}{I_{FSD}}(\Omega / volt), \uparrow S=\frac{Z\uparrow}{V}$$

It is also called ohms/volt rating of the instrument. Larger the sensitivity of an instrument, more accurate is the instrument. It is measured in Ω/volt. When the sensitivity is high, the impedance of meter is high. Hence it draws less current and loading affect is negligible. It is also defend as one over full scale deflectioncurrent.

Error in M.Iinstrument

Temperature error

Due to temperature variation, the resistance of the coil varies. This affects the deflection of the instrument. The coil should be made of manganin, so that the resistance is almost constant.

Hysteresiserror

Due to hysteresis affect the reading of the instrument will not be correct. When the current is decreasing, the flux produced will not decrease suddenly. Due to this the meter reads a higher value of current. Similarly when the current increases the meter reads a lower value of current. This produces error in deflection. This error can be eliminated using small iron parts with narrow hysteresis loop so that the demagnetization takes place very quickly.

Eddy currenterror

The eddy currents induced in the moving iron affect the deflection. This error can be reduced by increasing the resistance of the iron.

Stray fielderror

Since the operating field is weak, the effect of stray field is more. Due to this, error is produced in deflection. This can be eliminated by shielding the parts of theinstrument.

Frequencyerror

When the frequency changes the reactance of the coil changes.

$$Z = \sqrt{(R_m + R_S)^2 + X_L^2} \tag{1.70}$$

$$I = \frac{V}{Z} = \frac{V}{\sqrt{(R_m + R_S)^2 + X_L^2}} \tag{1.71}$$

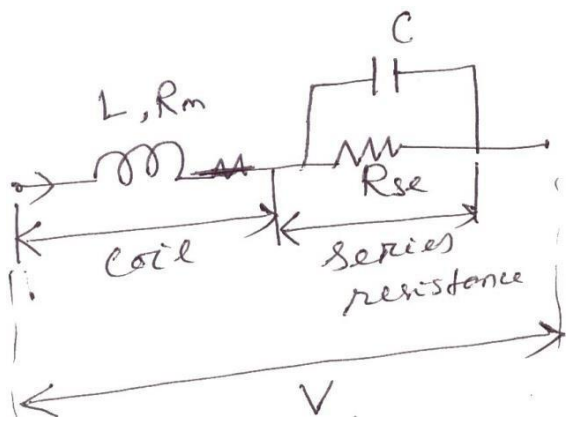

Fig. 1.18

Deflection of moving iron voltmeter depends upon the current through the coil. Therefore, deflection for a given voltage will be less at higher frequency than at low frequency. A capacitor is connected in parallel with multiplier resistance. The net reactance, ($X_L - X_C$) is very small, when compared to the series resistance. Thus the circuit impedance is made independent of frequency. This is because of the circuit is almost resistive.

$$C = 0.41 \frac{L}{(R_S)^2} \tag{1.72}$$

Electrostaticinstrument

In multi cellular construction several vans and quadrants are provided. The voltage is to be measured is applied between the vanes and quadrant. The force of attraction between the vanes

and quadrant produces a deflecting torque. Controlling torque is produced by spring control. Air friction damping is used.

The instrument is generally used for measuring medium and high voltage. The voltage is reduced to low value by using capacitor potential divider. The force of attraction is proportional to the square of the voltage.

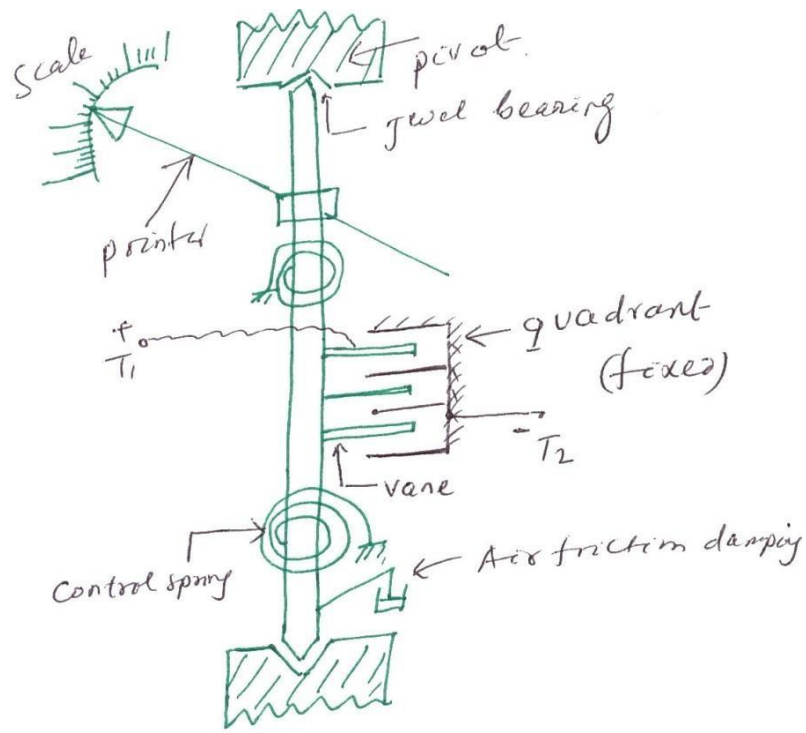

Fig. 1.19

<u>Torque develop by electrostatic instrument</u>V=Voltage applied between vane and quadrant C=capacitance between vane and quadrant

Energy stored= $\frac{1}{2}CV^2$ (1.73)

Let ‘ θ’ be the deflection corresponding to a voltage V.

Let the voltage increases by dv, the corresponding deflection is’ $\theta+d\theta$’

When the voltage is being increased, a capacitive current flows

$$i=\frac{dq}{dt}=\frac{d(CV)}{dt}=\frac{dC}{dt}V+C\frac{dV}{dt} \quad (1.74)$$

$V\times dt$ multiply on both side of equation (1.74)

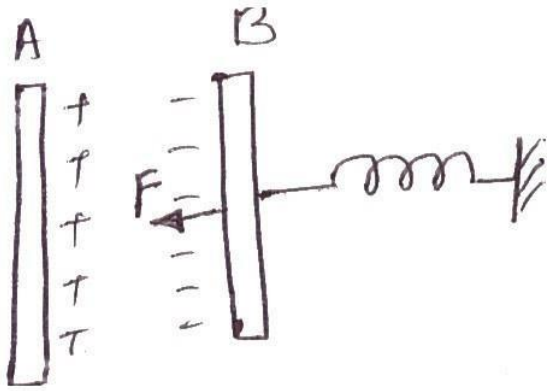

Fig. 1.20

$$Vi\,dt = \frac{dC}{dt}V^2 dt + CV\frac{dV}{dt} \qquad (1.75)$$

$$Vi\,dt = V^2 dC + CV dV \qquad (1.76)$$

$$\text{Change in stored energy} = \frac{1}{2}(C+dC)(V+dV)^2 - \frac{1}{2}CV^2 \qquad (1.77)$$

$$= \frac{1}{2}\left[(C+dC)V^2 + dV^2 + 2VdV\right] - \frac{1}{2}CV^2$$

$$= \frac{1}{2}\left[CV^2 + CdV^2 + 2CVdV + V^2 dC + dCdV^2 + 2VdVdC\right] - \frac{1}{2}CV^2$$

$$= \frac{1}{2}V^2 dC + CVdV$$

$$V^2 dC + CVdV = \frac{1}{2}V^2 dC + CVdV + F \times r d\theta \qquad (1.78)$$

$$T_d \times d\theta = \frac{1}{2}V^2 dC \qquad (1.79)$$

$$T = \frac{1}{2}V^2\left(\frac{dC}{d\theta}\right) \qquad (1.80)$$

At steady state condition, $T_d = T_C$

$$K\theta = \frac{1}{2}V^2\left(\frac{dC}{d\theta}\right) \qquad (1.81)$$

$$\theta = \frac{1}{2K}V^2\left(\frac{dC}{d\theta}\right) \qquad (1.82)$$

Advantages

- ✓ It is used in both AC andDC.
- ✓ There is no frequencyerror.
- ✓ There is no hysteresiserror.
- ✓ There is no stray magnetic field error. Because the instrument works on electrostatic principle.
- ✓ It is used for highvoltage
- ✓ Power consumption isnegligible.

Disadvantages

- ✓ Scale is notuniform
- ✓ Large insize
- ✓ Cost ismore

Multi rangeAmmeter

When the switch is connected to position (1), the supplied current I_1

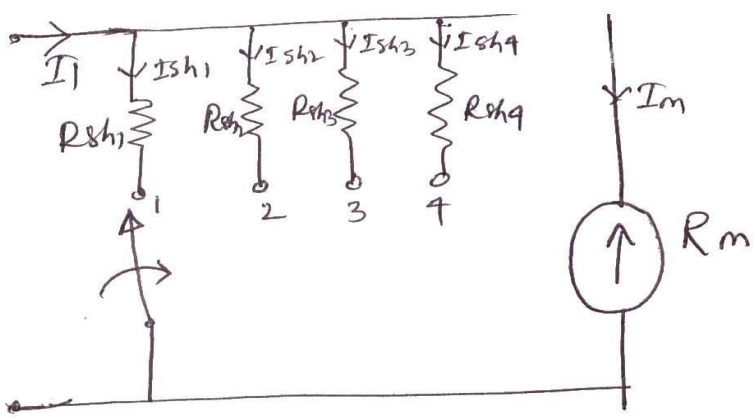

Fig. 1.21

$$I_{sh1}R_{sh1} = I_m R_m \tag{1.83}$$

$$R_{sh1} = \frac{I_m R_m}{I_{sh1}} = \frac{I_m R_m}{I_1 - I_m} \tag{1.84}$$

$$\frac{R_{sh1}}{} = \frac{R_m}{\frac{I_1}{I_m} - 1}, R_{sh1} = \frac{R_m}{m_1 - 1}, m_1 = \frac{I_1}{I_m} = \text{Multiplying power of shunt}$$

$$R_{sh2} = \frac{R_m}{m_2 - 1}, m_2 = \frac{I_2}{I_m} \tag{1.85}$$

$$R_{sh3} = \frac{R_m}{m_3 - 1}, m_3 = \frac{I_3}{I_m} \tag{1.86}$$

$$R_{sh4} = \frac{R_m}{m_4 - 1}, m_4 = \frac{I_4}{I_m} \tag{1.87}$$

Ayrtonshunt

$$R_1 = R_{sh1} - R_{sh2} \quad R_2 \tag{1.88}$$

$$= R_{sh2} - R_{sh3} \quad R_3 \tag{1.89}$$

$$= R_{sh3} - R_{sh4} \quad R_4 \tag{1.90}$$

$$= R_{sh4} \tag{1.91}$$

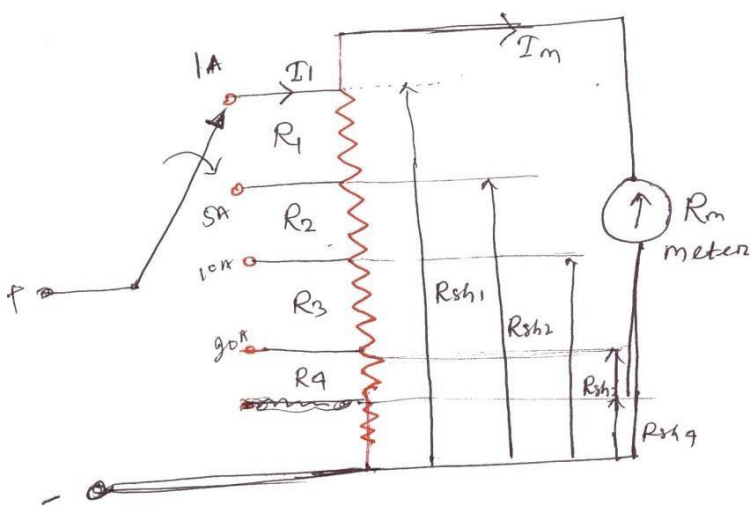

Fig. 1.22

Ayrton shunt is also called universal shunt. Ayrton shunt has more sections of resistance. Taps are brought out from various points of the resistor. The variable points in the o/p can be connected to any position. Various meters require different types of shunts. The Aryton shunt is used in the lab, so that any value of resistance between minimum and maximum specified can be used. It eliminates the possibility of having the meter in the circuit without a shunt.

Multi range D.C.voltmeter

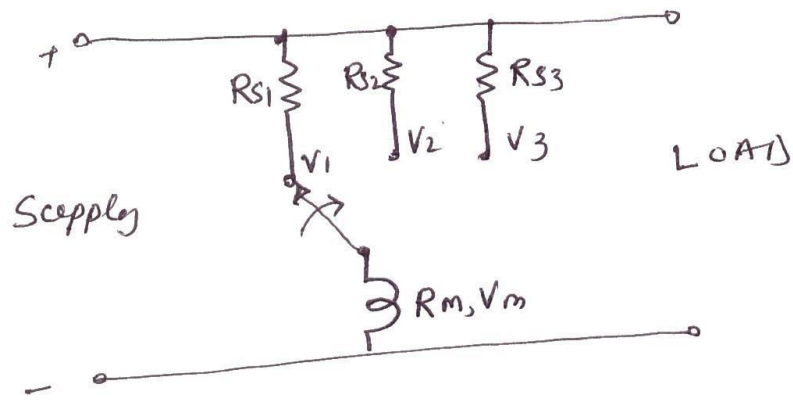

Fig. 1.23

$$R_{s1} = R_m\ (m_1 - 1)$$
$$R_{s2} = R_m\ (m_2 - 1) \qquad (1.92)$$
$$R_{s3} = R_m\ (m_3 - 1)$$

$$m_1 = \frac{V_1}{V_m},\ m_2 = \frac{V_2}{V_m},\ m_3 = \frac{V_3}{V_m} \qquad (1.93)$$

We can obtain different Voltage ranges by connecting different value of multiplier resistor in series with the meter. The number of these resistors is equal to the number of ranges required.

Potential dividerarrangement

The resistance R_1, R_2, R_3 and R_4 is connected in series to obtained the ranges V_1,V_2,V_3 and V_4

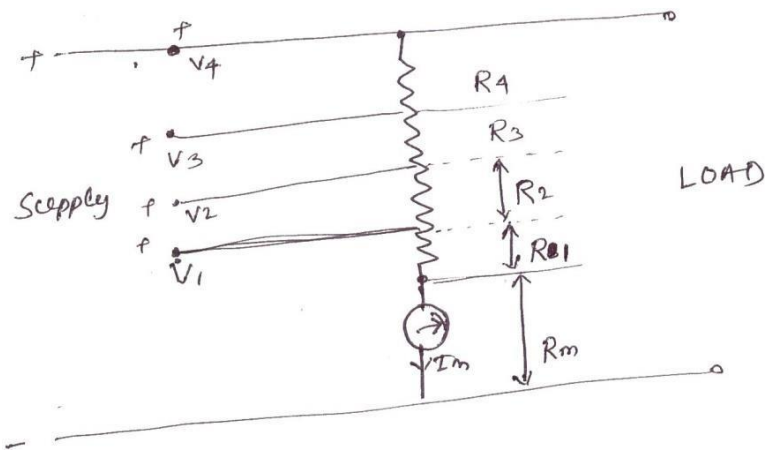

Fig. 1.24

Consider for voltage V_1, $(R_1 + R_m)I_m = V_1$

$$\therefore R_1 = \frac{V_1}{I_m} - R_m = \frac{V_1}{\left(\frac{V_m}{R_m}\right)} - R_m = \left(\frac{V_1}{V_m}\right)R_m - R_m \qquad (1.94)$$

$$R_1 = (m_1 - 1)R_m \qquad (1.95)$$

For V_2, $(R_2 + R_1 + R_m)I_m = V_2 \Rightarrow R_2 = \frac{V_2}{I_m} - R_1 - R_m$ (1.96)

$$R_2 = \frac{V_2}{\left(\frac{V_m}{R_m}\right)} - (m_1 - 1)R_m - R_m \qquad (1.97)$$

$$R_2 = m_2 R_m - R_m - (m_1 - 1)R_m$$

$$= R_m(m_2 - 1 - m_1 + 1) \qquad (1.98)$$

$$R_2 = (m_2 - m_1)R_m \qquad (1.99)$$

For V_3 $(R_3 + R_2 + R_1 + R_m)I_m = V_3$

$$R_3 = \frac{V_3}{I_m} - R_2 - R_1 - R_m$$

$$= \frac{V_3}{V_m}R_m - (m_2 - m)R_1 - (m - 1)R_m - R_m$$

$$= m_3 R_m - (m_2 - m_1)R_m - (m_1 - 1)R_m - R_m$$

$$R_3 = (m_3 - m_2)R_m$$

For V_4 $\quad (R_4 + R_3 + R_2 + R_1 + R_m) I_m = V_4$

$$R_4 = \frac{V_4}{I_m} - R_3 - R_2 - R_1 - R_m$$

$$\left(\frac{V_4}{I_m}\right) = R_m - (m_3 - m_2) R_m - (m_2 - m_1) R_m - (m_1 - 1) R_m - R_m$$

$$R_4 = R_m \left[m_4 - m_3 + m_2 - m_2 + m_1 - m_1 + 1 - 1 \right]$$

$$R_4 = (m_4 - m_3) R_m$$

Example: 1.1

A PMMC ammeter has the following specification

Coil dimension are 1cm×1cm. Spring constant is $0.15 \times 10^{-6}\ N-m/rad$, Flux density is $1.5 \times 10^{-3}\ wb/m^2$.Determine the no. of turns required to produce a deflection of 90^0 when a current 2mA flows through the coil.

Solution:

At steady state **condition** $T_d = T_C$

$$BANI = K\theta$$

$$\Rightarrow N = \frac{K\theta}{BAI}$$

A=$1 \times 10^{-4}\ m^2$

K= $0.15 \times 10^{-6} \frac{N-m}{rad}$

B=$1.5 \times 10^{-3} wb/m^2$

I= $2 \times 10^{-3}\ A$

$$\theta = 90^\circ = \frac{\Pi}{2} rad$$

N=785 ans.

Example: 1.2

The pointer of a moving coil instrument gives full scale deflection of 20mA. The potential difference across the meter when carrying 20mA is 400mV.The instrument to be used is 200A for full scale deflection. Find the shunt resistance required to achieve this, if the instrument to be used as a voltmeter for full scale reading with 1000V. Find the series resistance to be connected it?

Solution:

Case-1

V_m =400mV

I_m= 20mA

I=200A

$$R_m = \frac{V_m}{I_m} = \frac{400}{20} = 20\Omega$$

$$R = I_m\left(1 + \frac{R_m}{R_{sh}}\right)$$

$$200 = 20 \times 10^{-3}\left(1 + \frac{20}{R_{sh}}\right)$$

$$R_{sh} = 2 \times 10^{-3}\Omega$$

Case-II

V=1000V

$$V = V_m\left(1 + \frac{R_{se}}{R_m}\right)$$

$$4000 = 400 \times 10^{-3}\left(1 + \frac{R_{se}}{20}\right)$$

$$R_{se} = 49.98k\Omega$$

Example: 1.3

A 150 v moving iron voltmeter is intended for 50HZ, has a resistance of 3kΩ. Find the series resistance required to extent the range of instrument to 300v. If the 300V instrument is used to measure a d.c. voltage of 200V. Find the voltage across the meter?

Solution:

$R_m = 3k\Omega$,$V_m = 150V$,$V = 300V$

$$V = V_m\left(1+\frac{R_{se}}{R_m}\right)$$

$$300 = 150\left(1+\frac{R_{se}}{3}\right) \Rightarrow R_{se} = 3k\Omega$$

Case-II $V = V_m\left(1+\frac{R_{se}}{R_m}\right)$

$$200 = V_m\left(1+\frac{3}{3}\right)$$

$\therefore V_m = 100V$ Ans

Example: 1.4

What is the value of series resistance to be used to extent '0'to 200V range of 20,000Ω/volt voltmeter to 0 to 2000 volt?

Solution:

$V_{se} = V - V = 1800$

$$I_{FSD} = \frac{1}{20000} = \frac{1}{Sensitivity}$$

$V_{se} = R_{se} \times i_{FSD} \Rightarrow R_{se} = 36M\Omega$ ans.

Example: 1.5

A moving coil instrument whose resistance is 25Ω gives a full scale deflection with a current of 1mA. This instrument is to be used with a manganin shunt, to extent its range to 100mA. Calculate the error caused by a 10^0C rise in temperature when:

(a) Copper moving coil is connected directly across the manganinshunt.

(b) A75ohmmanganinresistanceisusedinserieswiththeinstrumentmovingcoil. The temperature co-efficient of copper is $0.004/^0$C and that of manganin is 0.00015^0/C.

Solution:

Case-1

$I_m = 1mA$ R_m

$= 25\Omega$

I=100mA

$$I = I_m\left(1+\frac{R_m}{R_{sh}}\right)$$

$$100 = 1\left(1+\frac{25}{R_{sh}}\right) \Rightarrow \frac{25}{R_{sh}} = 99$$

$$\Rightarrow R_{sh} = \frac{25}{99} = 0.2525\Omega$$

Instrument resistance for 10^0C rise in temperature, $R_{mt} = 25(1 + 0.004\times10)$

$R_t = R_o(1+\rho_t \times t)$

$R_{m/t=10^\circ} = 26\Omega$

Shunt resistance for 10^0C, rise in temperature

$R_{sh/t=10^\circ} = 0.2525(1 + 0.00015\times10) = 0.2529\Omega$

Current through the meter for 100mA in the main circuit for 10^0C rise in temperature

$$I = I_m\left(1+\frac{R_m}{R_{sh}}\right)_{t=10^\circ C}$$

$$100 = I_{mt}\left(1+\frac{26}{0.2529}\right)$$

$I_{m\,t=10} = 0.963mA$

But normal meter current=1mA

Error due to rise in temperature=(0.963-1)*100=-3.7%

Case-b As voltmeter

Total resistance in the meter circuit= $R_m + R_{sh} = 25 + 75 = 100\Omega$

$$I = I_m\left(1+\frac{R_m}{R_{sh}}\right)$$

$$100 = 1\left(1+\frac{100}{R_{sh}}\right)$$

$$R_{sh} = \frac{100}{100\ 1} = 1.01\Omega$$

Resistance of the instrument circuit for 10^0C rise in temperature

$$R_{m_{t=10}} = 25(1 + 0.004 \times 10) + 75(1 + 0.00015 \times 10) = 101.11\Omega$$

Shunt resistance for 10^0C rise in temperature

$$R_{sh_{t=10}} = 1.01(1 + 0.00015 \times 10) = 1.0115\Omega$$

$$I = I_m \left(1 + \frac{R_m}{R_{sh}}\right)$$

$$100 = I_m \left(1 + \frac{101.11}{1.0115}\right)$$

$$I_{m\,t=10^\circ} = 0.9905mA$$

Error =(0.9905-1)*100=-0.95%

Example: 1.6

The coil of a 600V M.I meter has an inductance of 1 henery. It gives correct reading at 50HZ and requires 100mA. For its full scale deflection, what is % error in the meter when connected to 200V D.C. by comparing with 200V A.C?

Solution:

$V_m = 600V$, $I_m = 100mA$

Case-IA.C.

$$Z_m = \frac{V_m}{I_m} = \frac{600}{0.1} = 6000\Omega$$

$$X_L = 2\Pi fL = 314\Omega$$

$$R_m = \sqrt{Z_m^2 - X_L^2} = \sqrt{(6000)^2 - (314)^2} = 5990\Omega$$

$$I_{AC} = \frac{V_{AC}}{Z} = \frac{200}{6000} = 33.33mA$$

Case-II D.C

$$I_{DC} = \frac{V_{DC}}{R_m} = \frac{200}{5990} = 33.39mA$$

Error= $\frac{I_{DC} - I_{AC}}{I_{AC}} \times 100 = \frac{33.39 - 33.33}{33.33} \times 100 = 0.18\%$

Example: 1.7

A 250V M.I. voltmeter has coil resistance of 500Ω, coil inductance 0f 1.04 H and series resistance of 2kΩ. The meter reads correctively at 250V D.C. What will be the value of capacitance to be used for shunting the series resistance to make the meter read correctly at 50HZ? What is the reading of voltmeter on A.C. without capacitance?

Solution: $C = 0.41 \frac{L}{(R_S)^2}$

$= 0.41 \times \frac{1.04}{(2\times10^3)^2} = 0.1\mu F$

ForA.C $Z = \sqrt{(R_m + R_{Se})^2 + X_L^2}$

$Z = \sqrt{(500 + 2000)^2 + (314)^2} = 2520\Omega$

With D.C

$R_{total} = 2500\Omega$

For 2500Ω →250V

$1\Omega \rightarrow \frac{250}{2500}$

$2520\Omega \rightarrow \frac{250}{250} \times 2520 = 248V$

Example: 1.8

The relationship between inductance of moving iron ammeter, the current and the position of pointer is as follows:

Reading (A)	1.2	1.4	1.6	1.8
Deflection (degree)	36.5	49.5	61.5	74.5
Inductance (μH)	575.2	576.5	577.8	578.8

Calculate the deflecting torque and the spring constant when the current is 1.5A?

Solution:

For current I=1.5A, θ=55.5 degree=0.96865 rad

$$\frac{dL}{d\theta} = \frac{577.65 - 576.5}{60 - 49.5} = 0.11\mu H/\text{deg}\,ree = 6.3\mu H/rad$$

Deflecting torque , $T_d = \frac{1}{2} I^2 \frac{dL}{d\theta} = \frac{1}{2}(1.5)^2 \times 6.3 \times 10^{-6} = 7.09 \times 10^{-6}\, N-m$

Spring constant, $K = \frac{T_d}{\theta} = \frac{7.09 \times 10^{-6}}{0.968} = 7.319 \times 10^{-6}\, \frac{N-m}{rad}$

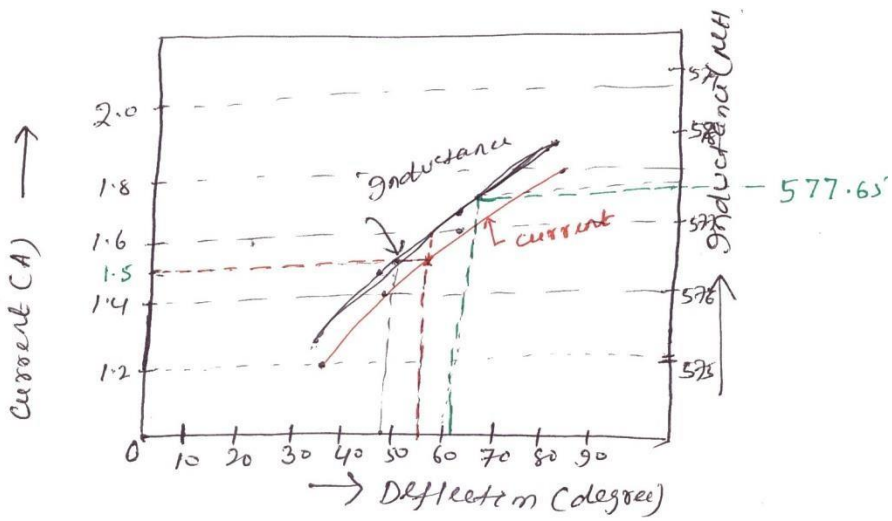

Fig. 1.25

Example: 1.9

For a certain dynamometer ammeter the mutual inductance 'M' varies with deflection θ as $M = -6\cos(\theta + 30^\circ)mH$. Find the deflecting torque produced by a direct current of 50mA corresponding to a deflection of 60^0.

Solution:

$$T_d = II_{12}\frac{dM}{d\theta} = I^2 \frac{dM}{d\theta}$$

$$M = -6\cos(\theta + 30^\circ)$$

$$\frac{dM}{d\theta} = 6\sin(\theta + 30)mH$$

$$\left.\frac{dM}{d\theta}\right|_{\theta=60} = 6\sin 90 = 6mH/\text{deg}$$

$$T_d = I^2 \frac{dM}{d\theta} = (50 \times 10^{-3})^2 \times 6 \times 10^{-3} = 15 \times 10^{-6}\, N-m$$

Example: 1.10

The inductance of a moving iron ammeter with a full scale deflection of 90^0 at 1.5A, is given by the expression $L = 200 + 40\theta - 4\theta^2 - \theta^3 \mu H$, where θ is deflection in radian from the zero position. Estimate the angular deflection of the pointer for a current of 1.0A.

Solution:

$L = 200 + 40\theta - 4\theta^2 - \theta^3 \mu H$

$$\left.\frac{dL}{d\theta}\right|_{\theta=90^\circ} = 40 - 8\theta - 3\theta^2 \mu H / rad$$

$$\left.\frac{dL}{d\theta}\right|_{\theta=90^\circ} = 40 - 8\times\frac{\Pi}{2} - 3\left(\frac{\Pi}{2}\right)^2 \mu H / rad = 20\mu H / rad$$

$$\therefore \theta = \frac{1}{2K} I^2 \left(\frac{dL}{d\theta}\right)$$

$$\frac{\Pi}{2} = \frac{1}{2}\frac{(1.5)^2}{K} \times 20\times 10^{-6}$$

K=Spring constant=$14.32\times10^{-6}\ N-m/rad$

For I=1A, $\therefore \theta = \frac{1}{2K} I^2 \left(\frac{dL}{d\theta}\right)$

$$= \frac{1}{2}\frac{1}{14.32\times10^{-6}}\left(40 - 8\theta - 3\theta\right)$$

$3\theta + 36.64\theta^2 - 40 = 0$

$\theta = 1.008 rad, 57.8^\circ$

Example: 1.11

The inductance of a moving iron instrument is given by $L = 10 + 5\theta - \theta^2 - \theta^3 \mu H$, where θ is the deflection in radian from zero position. The spring constant is $12\times10^{-6}\ N-m/rad$. Estimate the deflection for a current of 5A.

Solution:

$$\frac{dL}{d\theta} = (5 - 2\theta)\frac{\mu H}{rad}$$

$$\therefore \theta = \frac{1}{2K} I^2 \left(\frac{dL}{d\theta}\right)$$

$$\therefore \theta = \frac{1}{2} \times \frac{(5)^2}{12 \times 10^{-6}} (5 - 2\theta) \times 10^{-6}$$

$$\therefore \theta = 1.69 rad, 96.8^\circ$$

Example: 1.12

The following figure gives the relation between deflection and inductance of a moving iron instrument.

Deflection (degree)	20	30	40	50	60	70	80	90
Inductance (μH)	335	345	355.5	366.5	376.5	385	391.2	396.5

Find the current and the torque to give a deflection of (a) 30^0 (b) 80^0 . Given that control spring constant is $0.4 \times 10^{-6} N - m / \deg ree$

Solution:

$$\theta = \frac{1}{2K} I^2 \left(\frac{dL}{d\theta}\right)$$

(a) For $\theta = 30^\circ$

The curve is linear

$$\therefore \left(\frac{dL}{d\theta}\right)_{\theta=30} = \frac{355.5 - 335}{40 - 20} = 1.075 \mu H / \deg ree = 58.7 \mu H / rad$$

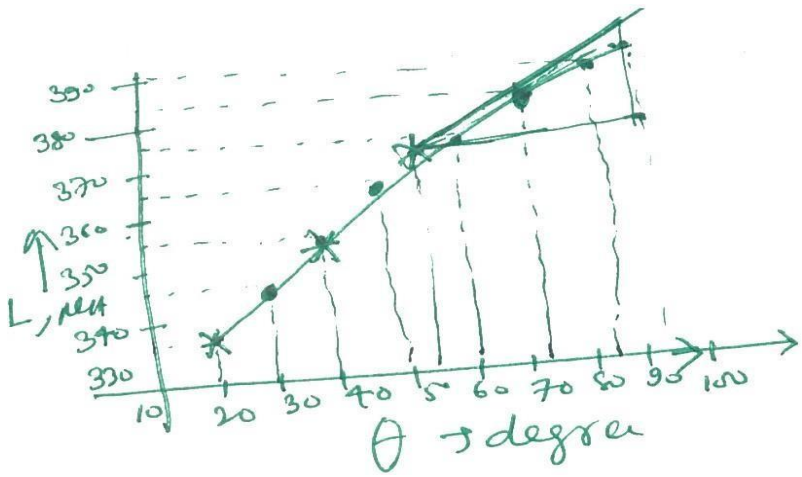

Fig. 1.26

Example: 1.13

Inanelectrostaticvoltmeterthefullscaledeflectionisobtainedwhenthemovingplateturns through90^0.Thetorsionalconstantis $10\times10^{-6}N\text{–}m/rad$.Therelationbetweentheangleof deflection and capacitance between the fixed and moving plates is given by

Deflection (degree)	0	10	20	30	40	50	60	70	80	90
Capacitance (PF)	81.4	121	156	189.2220		246	272	294	316	334

Find the voltage applied to the instrument when the deflection is 90^0?

Solution:

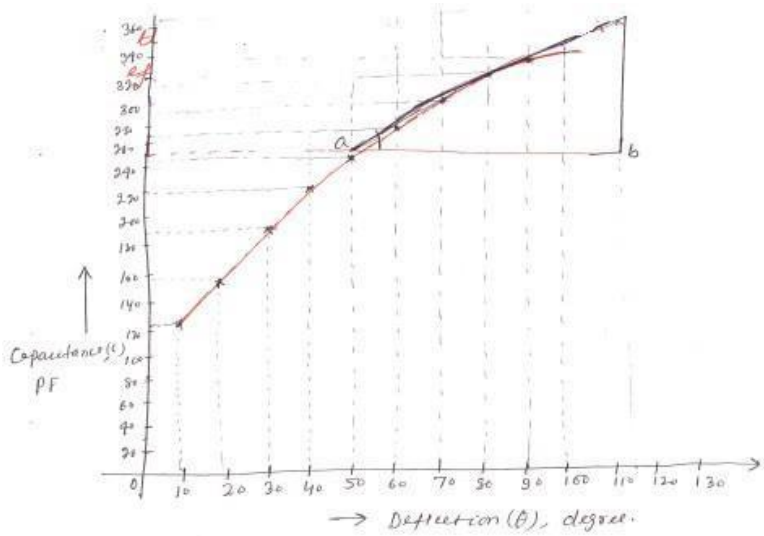

Fig. 1.27

$$\frac{dC}{d\theta} = \tan\theta = \frac{bc}{ab} = \frac{370-250}{110-44} = 1.82PF/\text{deg}\,ree = 104.2PF/rad$$

Spring constant $K = 10\times10^{-6}\,\frac{N-m}{\text{deg}\,ree\,rad} = 0.1745\times10^{-6}\,N-m/\text{deg}\,ree\,rad$

$$\theta = \frac{1}{2K}V^2\left(\frac{dC}{d\theta}\right) \Rightarrow V = \sqrt{\frac{2K\theta}{\frac{dC}{d\theta}}}$$

$$V = \sqrt{\frac{2\times0.1745\times10^{-6}\times90}{104.2\times10^{-12}}} = 549volt$$

Example: 1.14

Design a multi range d.c.mille ammeter using a basic movement with an internal resistance $R_m = 50\Omega$ and a full scale deflection current $I_m = 1mA$. The ranges required are 0-10mA; 0-50mA; 0-100mA and 0-500mA.

Solution:

Case-I 0-10mA

Multiplying power $m = \frac{I}{I_m} = \frac{10}{1} = 10$

$\therefore$ Shunt resistance $R_{sh1} = \frac{R_m}{m-1} = \frac{50}{10-1} = 5.55\Omega$

Case-II 0-50mA

$m = \frac{50}{1} = 50$

$R_{sh2} = \frac{R_m}{m-1} = \frac{50}{50-1} = 1.03\Omega$

Case-III 0-100mA, $m = \frac{100}{1} = 100\Omega$

$R_{sh3} = \frac{R_m}{m-1} = \frac{50}{100-1} = 0.506\Omega$

Case-IV 0-500mA, $m = \frac{500}{1} = 500\Omega$

$R_{sh4} = \frac{R_m}{m-1} = \frac{50}{500-1} = 0.1\Omega$

Example: 1.15

A moving coil voltmeter with a resistance of 20Ω gives a full scale deflection of 120^0, when a potential difference of 100mV is applied across it. The moving coil has dimension of 30mm*25mm and is wounded with 100 turns. The control spring constant is $0.375\times10^{-6} N-m/degree$.Findthefluxdensity,inthe airgap.Find alsothediameterof copper wire of coil winding if 30% of instrument resistance is due to coil winding. The specific resistance forcopper=$1.7\times10^{-8}\Omega m$.

Solution:

Data given V_m

$= 100mV$ $R_m =$

20Ω

$\theta = 120^\circ$

N=100

$K = 0.375 \times 10^{-6} N-m / \deg ree$

$R_C = 30\% of R_m$

$\rho = 1.7 \times 10^{-8} \Omega m$

$$I_m = \frac{V_m}{R_m} = 5 \times 10^{-3} A$$

$T_d = BANI$,$T_C = K\theta = 0.375 \times 10^{-6} \times 120 = 45 \times 10^{-6} N-m$

$$B = \frac{T_d}{ANI} = \frac{45\times10^{-6}}{30\times25\times10^{-6}\times100\times5\times10^{-3}} = 0.12 wb/m^2$$

$R_C = 0.3\times 20 = 6\Omega$

Length of mean turn path =2(a+b) =2(55)=110mm

$$R_C = N\left(\frac{\rho l}{A}\right)$$

$$A = \frac{N\times\rho\times(l_t)}{R_C} = \frac{100 \times 1.7 \times 10^{-8} \times 110 \times 10^{-3}}{6}$$

$= 3.116\times10^{-8}\ m^2$

$= 31.16\times10^{-3}\ mm^2$

$A = \frac{\Pi}{4} d^2 \Rightarrow d = 0.2mm$

Example: 1.16

A moving coil instrument gives a full scale deflection of 10mA, when the potential difference across its terminal is 100mV. Calculate

(1) The shunt resistance for a full scale deflection corresponding to100A

(2) The resistance for full scale reading with 1000V.

Calculate the power dissipation in eachcase?

Solution:

Data given

$I_m = 10mA$ $V_m = 100mV$ $I = 100\ A$

$R = I_m\left(1+\frac{R_m}{R_{sh}}\right)$

$100 = 10\times10^{-3}\left(1+\frac{10}{R_{sh}}\right)$

$R_{sh} = 1.001\times10^{-3}\Omega$

$R_{se} = ??, V = 1000V$

$R_m = \frac{V_m}{I_m} = \frac{100}{10} = 10\Omega$

$V = V_m\left(1+\frac{R_{se}}{R_m}\right)$

$1000 = 100\times10^{-3}\left(1+\frac{R_{se}}{10}\right)$

$\therefore R_{se} = 99.99K\Omega$

Example: 1.17

Design an Aryton shunt to provide an ammeter with current ranges of 1A,5A,10A and 20A. A basic meter with an internal resistance of 50w and a full scale deflection current of 1mA is to be used.

Solution: Data given

$I_m = 1\times10^{-3}\,A$

$R_m = 50\Omega$

$I_4 = 20\,A$

$I_1 = 1A$

$I_2 = 5A$

$I_3 = 10\,A$

$m_1 = \frac{I_1}{I_m} = 1000\,A$

$m_2 = \frac{I_2}{I_m} = 5000\,A$

$m_3 = \frac{I_3}{I_m} = 10000\,A$

$m_4 = \frac{I_4}{I_m} = 20000\,A$

$R_{sh1} = \frac{R_m}{m_1 - 1} = \frac{50}{1000 - 1} = 0.05\Omega$

$R_{sh2} = \frac{R_m}{m_2 - 1} = \frac{50}{5000 - 1} = 0.01\Omega$

$R_{sh3} = \frac{R_m}{m_3 - 1} = \frac{50}{10000 - 1} = 0.005\Omega$

$R_{sh4} = \frac{R_m}{m_4 - 1} = \frac{50}{20000 - 1} = 0.0025\Omega$

$\therefore$ The resistances of the various section of the universal shunt are

$R_1 = R_{sh1} - R_{sh2} = 0.05 - 0.01 = 0.04\Omega$

$R_2 = R_{sh2} - R_{sh3} = 0.01 - 0.005 = 0.005\Omega$ R_3

$= R_{sh3} - R_{sh4} = 0.005 - 0.025 = 0.0025\Omega$ R_4

$= R_{sh4} = 0.0025\Omega$

Example: 1.18

A basic d' Arsonval meter movement with an internal resistance $R_m = 100\Omega$ and a full scale current of $I_m = 1mA$ is to be converted in to a multi range d.c. voltmeter with ranges of 0-10V, 0-50V, 0-250V, 0-500V. Find the values of various resistances using the potential divider arrangement.

Solution:

Data given

$R_m = 100\Omega$

$I_m = 1mA$

$V_m = I_m \times R_m$

$V_m = 100 \times 1 \times 10^{-3}$

$V_m = 100mV$

$$m_1 = \frac{V_1}{V_m} = \frac{10}{100 \times 10^{-3}} = 100$$

$$m_2 = \frac{V_2}{V_m} = \frac{50}{100 \times 10^{-3}} = 500$$

$$m_3 = \frac{V_3}{V_m} = \frac{250}{100 \times 10^{-3}} = 2500$$

$$m_4 = \frac{V_4}{V_m} = \frac{500}{100 \times 10^{-3}} = 5000$$

$$R_1 = (m_1 - 1)R_m = (100 - 1) \times 100 = 9900\Omega$$

$$R_2 = (m_2 - m_1)R_m = (500 - 100) \times 100 = 40K\Omega$$

$$R_3 = (m_3 - m_2)R_m = (2500 - 500) \times 100 = 200K\Omega$$

$$R_4 = (m_4 - m_3)R_m = (5000 - 2500) \times 100 = 250K\Omega$$

UNIT – II
MEASURMENT OF POWER & ENERGY

Dynamometer type wattmeter works on very simple principle and this principle can be stated as when any current carrying conductor is placed inside a magnetic field, it experiences a mechanical force and due to this mechanical force deflection of conductor takes place.

Construction and Working Principle of Electrodynamometer Type Wattmeter

Now let us look at constructional details of electrodynamometer. It consists of following parts.

Moving Coil

Moving coil moves the pointer with the help of spring control instrument. Limited of current flows through the moving coil so as to avoid heating. So in order to limit the current we have connected the high value resistorin series with the moving coil. The moving is air cored and is mounted on a pivoted spindle and can move freely. In **electrodynamometer type wattmeter**, moving coil works as pressure coil. Hence moving coil is connected across the voltageand thus the current flowing through this coil is always proportional to the voltage

Fixed Coil

The fixed coil is divided into two equal parts and these are connected in series with the load, therefore the load current will flow through these coils. Now the reason is very obvious of using two fixed coils instead of one, so that it can be constructed to carry considerable amount of electric current. These coils are called the current coils of **electrodynamometer type wattmeter**. Earlier these fixed coils are designed to carry the current of about 100 amperes but now the modern wattmeter are designed to carry current of about 20 amperes in order to save power.

Control System Out of two controlling systems i.e.

1. Gravitycontrol
2. Spring control, only spring controlled systems are used in these types of wattmeter. Gravity controlled system cannot be employed because they will be appreciable amount oferrors.

Damping System Air friction damping is used, as eddy current damping will distort the weak operating magnetic field and thus it may leads to error. **Scale** There is uniform scale which is used in these types of instrument as moving coil moves linearly over a

range of 40 degrees to 50 degrees on either side. Now let us derive the expressions for the controlling torque and deflecting torques. In order to derive these expressions let us consider the circuit diagram givenbelow:

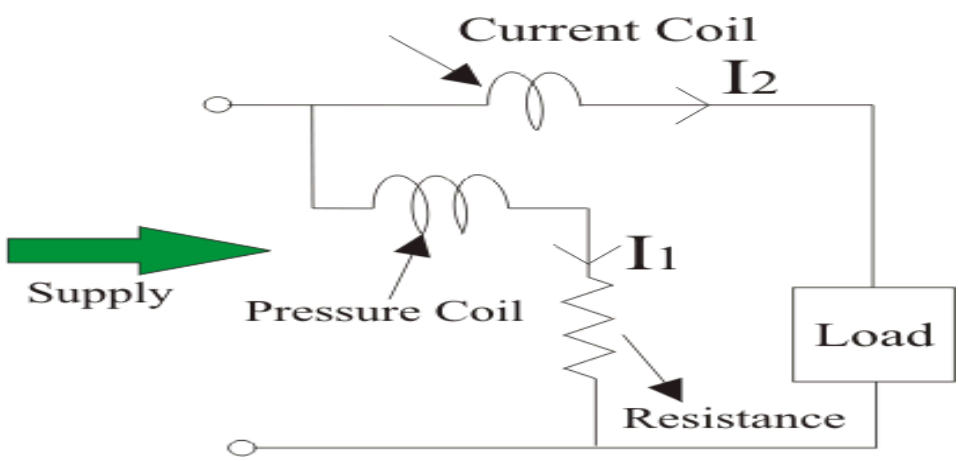

We know that instantaneous torque in electrodynamic type instruments is directly proportional to product of instantaneous values of currents flowing through both the coils and the rate of change of flux linked with the circuit. Let I_1 and I_2 be the instantaneous values of currents in pressure and current coils respectively. So the expression for the torque can be written as:

$$T = I_1 \times I_2 \times \frac{dM}{dx}$$

Where, x is the angle. Now letthe applied value of voltage across the pressure coil be $v = \sqrt{2}V sin\omega t$Assuming the electrical resistanceto the pressure coil bevery high hence we can neglect reactance with respect to its resistance. In this the impedance is equal to its electricalresistancetherefore it is purely resistive. The expression for instantaneous current can be written as $I_2 = v / R_p$ where R_p is the resistance of pressurecoil

$$I_2 = \sqrt{2} \times \frac{V sin\omega t}{R_p}$$

If there is phase difference between voltage and electric current, then expression for instantaneous current through current coil can bewrittenas $I_1 = I(t) = \sqrt{2} I sin(\omega t - \phi)$As current through the pressure coil is very very small compared to the current through current coil hence current through the current coil can be considered as equal to total load current. Hence the

$$\sqrt{2} \times \frac{V sin\omega t}{R_p} \times \sqrt{2} \times I \times sin(\omega t - \phi) \times \frac{dM}{dx}$$

instantaneous value of torque can be writtenas

Average value of deflecting torque can be obtained by integrating the instantaneous torque from limit 0 to T, where T is the time period of the cycle.

$$T_d = deflecting\ torque = \frac{VI}{R_p} cos\phi \times \frac{dM}{dx}$$

Controlling torque is given by $T_c = K_x$ where K is spring constant and x is final steady state value of deflection.

Advantages of Electrodynamometer Type Wattmeter

Following are the **advantages of electrodynamometer type wattmeter** and they are written as follows:

1. Scale is uniform upto a certainlimit.
2. They can be used for both to measure ac as well dc quantities as scale is calibrated forboth.

Errors in Electrodynamometer Type Wattmeter

Following are the errors in the electrodynamometer type watt meters:

1. Errors in the pressure coilinductance.
2. Errors may be due to pressure coilcapacitance.
3. Errors may be due to mutual inductanceeffects.

4. Errors may be due connections.(i.e. pressure coil is connected after currentcoil)
5. Error due to Eddycurrents.
6. Errors caused by vibration of movingsystem.
7. Temperature error.
8. Errors due to stray magnetic field.

What is Low Power Factor Wattmeter?

As the name suggests the low power factor meterare the instruments that measures lower values of power factor accurately.

There are two main reasons that would suggests us that we should not use ordinary wattmeter in measuring the low value of power factor.

1. The value of deflecting torque is very low even though we fully excite the current and pressure coils.
2. Errors due pressure coilinductance.

some modification or adding some new features we can use modified electrodynamic wattmeter or low power factor to measure the low power factor accurately.

(1) The electrical resistanceof the ordinary wattmeter's pressure coil is reduced to low value such that current in the pressure coil circuit is increased, thus it leads to. In this category two cases diagrams arises and these are shownbelow:

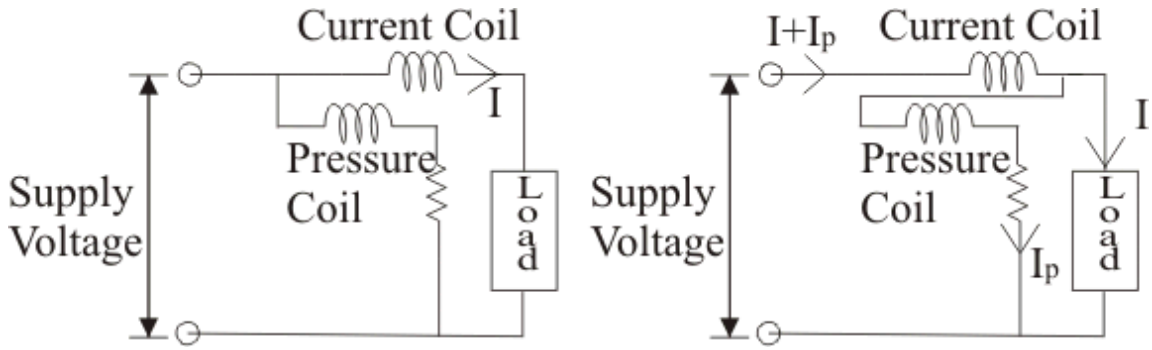

both the ends of the pressure coil is connected to supply side (i.e. current coil is in series with the load). The supply voltage is equal to the voltageacross the pressure coil. Thus in this case we

have power shown by the first wattmeteris equal to the power loss in the load plus power loss in the current coil.

$$Mathematically\ P_1 = power\ consumed\ by\ load + I^2 R_1$$

In the second category, the current coil is not in series with the load and the voltage across the pressure coil is not equal to the applied voltage. The voltage across pressure coil is equal to the voltage across the load. In this power shown by the second watt meter is equal to the power loss in the load plus the power loss in the pressure coil.

$$Mathematically\ P_2 = power\ consumed\ by\ load + I^2 R_2$$

From the above discussion we conclude that in both cases we have some amount of errors hence there is need to do some modification in above circuits to have minimum error.

The modified circuit is shown below: We have used here a special coil called compensating coil, it carries current equal to the sum of two currents i.e load current plus pressure coil current. The pressure coil is placed such that the field produced by the compensating coil is opposed by the field produced by pressure coil as shown in the above circuit diagram.

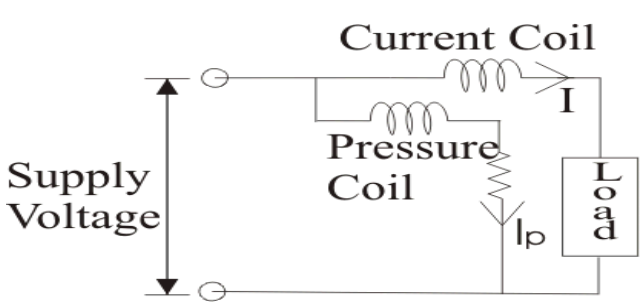

Thus the net field is due to the current I only. Hence by this way error caused by pressure coil can beneutralised.

(2) We require compensating coil in the circuit in order to make the low power factor meter. It is the second modification that we have discussed indetailabove.

(3) Now the third point deals with the compensation of the inductanceof pressure coil, which can be achieved by doing modification in above circuit.

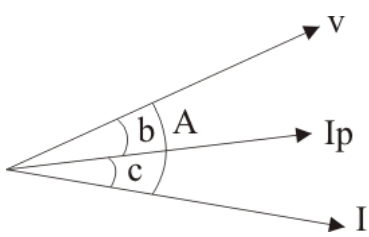

Now let us derive an expression for the correction factor for pressure coil inductance. And from this correction factor we are going to derive an an expression for error due to inductance of pressure coil. If we consider the inductance of pressure coil we don't have voltage across pressure in phase with the applied voltage. Hence it that case it lag by anangle

$$b = tan^{-1}\frac{W_l}{R + r_p}$$

Where, R is electrical resistance in series with pressure coil, r_p is pressure coil resistance, here we also conclude that the current in the current coil is also lagging by some angle with the current in pressure coil. And this angle is given by C = A - b. At this time reading of the voltmeteris givenby

$$\frac{VIcos(C)\frac{dM}{dx}}{K+R_p} \cdots\cdots\cdots(1)$$

Where, R_p is (r_p+R) and x is angle. If we ignore the effect of inductance of pressure i.e putting b = 0 we have expression for true power as

$$\frac{VIcos(A)\frac{dM}{dx}}{K \cdot R_p} \cdots\cdots\cdots(2)$$

On taking ratio of equations (2) and (1) we have expression for correction factor as written below:

$$\frac{cos(A)}{cos(b)cos(A-b)}$$

And from this correction factor error can be calculated as

$$Error = \{1 - (correction\ factor)\} \times (actual\ reading\ of\ the\ voltmeter)$$

On substituting the value of correction factor and taking suitable approximation we have expression for error as VIsin(A)*tan(b).

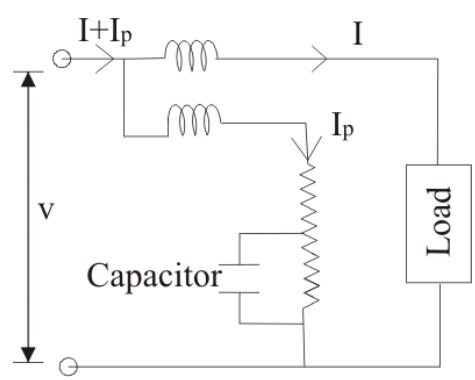

Now we know that the error caused by pressure coil inductance is given by the expression e = VIsin(A) tan(b), if power factoris low (i.e in our case the value of φ is large hence we have large error). Thus in order to avoid this situation we have connect the variable series resistance with a capacitor as shown in the above

figure. This final modified circuit so obtained is called **low power factor meter**. A modern low power factor meter is designed such that it gives high accuracy while measuring power factors even lower than 0.1.

TWO-ELEMENT WATTMETER FOR THREE-PHASE SYSTEM

two single-phase wattmeters were used to measure the power in a three-phase, three-wire sys- tem. The two single-phase wattmeters can be combined into a single instrument

The scale of this instrument indicates the sum or difference of the power values indicated by the separate meters. To make the single wattmeter, two sets of potential coils are mounted on a single shaft. Also, two sets of field coils are mounted on the instrument frame so that they have the proper relationship to the armature coils. In this way, each of two power measuring mechanisms develops a torque that is proportional to the power in the circuit to which it is connected. These torque values are added to obtain the total power in the three-phase, three-wire circuit. If the power factor of the system is less than 0.5, the torque of one mechanism opposes that of the second mechanism. The difference between the torque values is the powerindication.

A wattmeter containing two dynamometer mechanisms is called a *two-element wattmeter*.

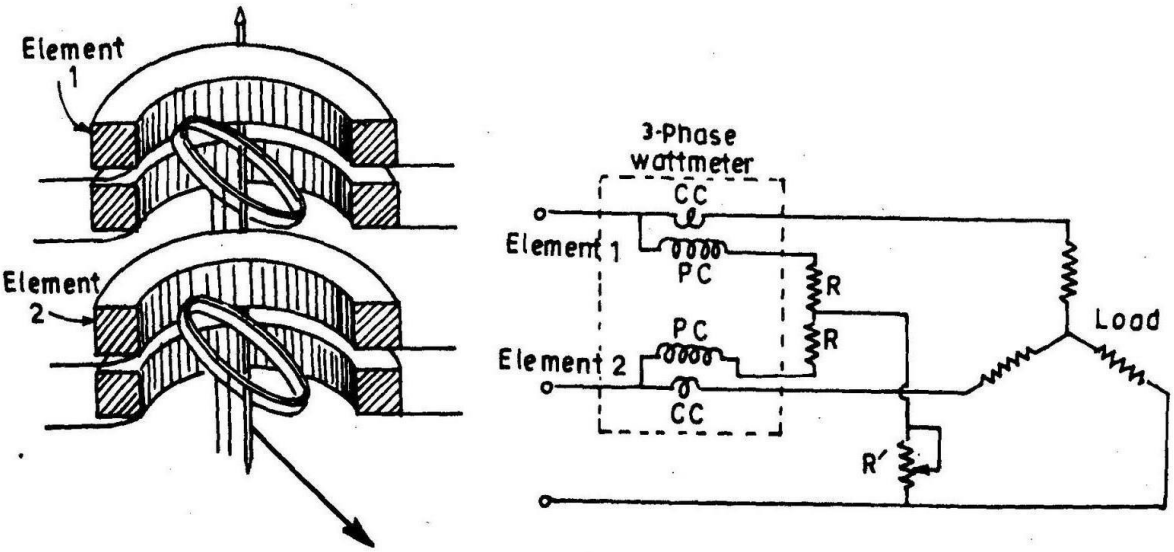

Power Factor Meters

Now there are two types of power factor meters-

1. Electrodynamometertype
2. Moving irontype.

Let us study electrodynamometer type first.

Electrodynamometer Type Power Factor Meter

In **electrodynamometer type power factor meter** there are further two types on the basis of supply voltage

1. Singlephase
2. Threephase.

The general circuit diagram of single phase electrodynamometer

power factor meter is given below.

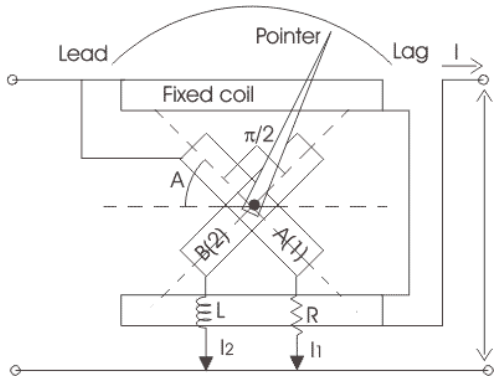

Now the pressure coil is split into two parts one is purely inductive another is purely resistive as shown in the diagram by resistorand inductor. At present the reference plane is making an angle A with coil 1. And the angle between both the

coils 1 and 2 is 90°. Thus the coil 2 is making an angle (90° + A) with the reference plane. Scale of the meter is properly calibrated as shown the value values of cosine of angle A. Let us mark the electrical resistanceconnected to coil 1 be R and inductorconnected to coil 2 be L. Now during measurement of power factor the values of R and L are adjusted such that R = wL so that both coils carry equal magnitude of current. Therefore the current passing through the coil 2 is lags by 90° with reference to current in coil 1 as coil 2 path is highly inductive in nature. Let us derive an expression for deflecting torque for this **power factor meter**. Now there are two deflecting torques one is acting on the coil 1 and another is acting on the coil 2. The coil winding are arranged such that the two torques produced, are opposite to each other and therefore pointer will take a position where the two torques are equal. Let us write a mathematical expression for the deflecting torque for coil 1-

$T_1 = KVIM \cos A \sin B$ Where M is the maximum value of mutual inductance between the two coils, B is the angular deflection of the plane of reference. Now the mathematical expression for the deflecting torque for coil 2is-

$$T_2 = KVIM \cos(90 - A) \sin(90 + B) = KVIM \sin A \cos B$$

At equilibrium we have both the torque as equal thus on equating T_1=T_2 we have A = B. From here we can see that the deflection angle is the measure of phase angle of the given circuit. The phasor diagram is also shown for the circuit such that the current in the coil 1 is approximately at an angle of 90° to current in the coil 2

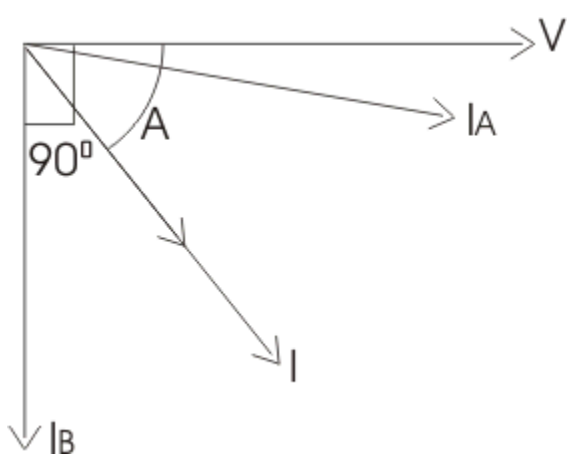

.

Given below are some of the advantages and disadvantages of using

electrodynamic type power factor meters.

Advantages of Electrodynamic Type Power Factor Meters

1. Losses are less because of minimum use of iron parts and also give less error over a small range of frequency as compared to moving iron typeinstruments.
2. They high torque is to weightratio.

Disadvantages of Electrodynamic Type Power Factor Meters

1. Working forces are small as compared to moving iron typeinstruments.
2. The scale is not extended over360^{o}.
3. Calibration of electrodynamometer type instruments are highly affected by the changing the supply voltagefrequency.
4. They are quite costly as compared to otherinstruments.

WATT HOUR METER

Watt-hour meter is in fact a measuring device which can evaluate and records the electrical power passing through a circuit in a certain time. By implementing the Watt-hour meter, we can know how much amount of electrical energy is used by a consumer or a residence or an electrically powered device or a business. Electrical utilities install these meters at their consumer's place to evaluate the electrical usage for the purpose of billing. The reading is taken in each one billing period. Usually, the billing unit is Kilowatt-hour (kWh). This is equal to the total usage of electrical energy by a consumer of one kilowatt during a period of one hour and it is also equal to 3600000 joules. The Watt-Hour Meter is often referred as energy meter or electric meter or electricity meter or electrical meter. Mainly the watt-hour meter comprises of a tiny motor and a counter. The motor will operate by diverting exact fraction of currentwhich is flowing in the circuit to be measured.

Electromechanical Type Induction Meter

In this type of meter, a non-magnetic and electrically conductive aluminium metal disc is made to revolve in a magnetic field. The rotation is made possible with the power passing through it. The rotation speed is proportional to the power flow through the meter. Gear trains and counter mechanisms are incorporated to

integrate this power. This meter works by counting the total number of revolutions and it is relative to the usage ofenergy.

A series magnet is connected in series with the line and that comprises of a coil of few turns with thick wire. A shunt magnet is connected in shunt with the supply and comprises of a coil of large number of turns with thin wire. A braking magnet which is a permanent magnet is included for stopping the disc at the time of power failure and to place the disc in position. This is done by applying a force opposite to the rotation of thedisc.

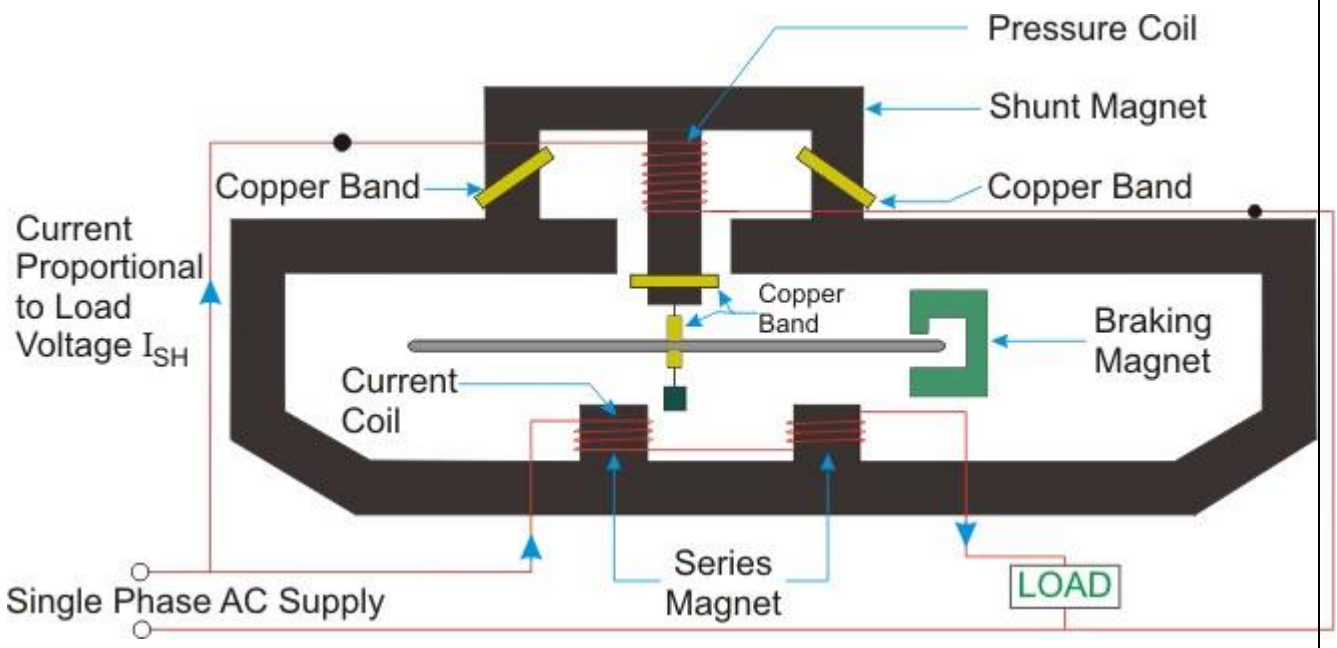

A flux is produced by the series magnet that is directly proportional to the current flow and another flux is produced by the shunt magnet corresponding to the voltage. Because of the inductive nature, these two fluxes lag each other by 90°. An eddy currentis developed in the disc which is the interface of the two fields. This current is produced by a force that is corresponding to the product of instantaneous current, voltage and the phase angle among them. A break torque is developed on the disc by the braking magnet positioned over one side of the disc. The speed of the disc becomes constant when the following condition is achieved,

$$Power = \frac{3600.Kh}{time\ in\ sec\ for\ one\ revolution\ of\ the\ disc}$$

Braking torque = Driving torque. The gear arrangement linked with the shaft of the disc is implemented for recording the number of revolution. This is for single phase AC measurement. Additional number of coils can be implemented for different phase configuration.

INDUCTION TYPE METERS

The principle of working and construction of ***induction type meter*** is very simple and easy to understand that's why these are widely used in measuring energy in domestic as well as industrial world. In all induction meters we have two fluxes which are produced by two different alternating currents on a metallic disc. Due to alternating fluxes there is an induced emf,the emf

produced at one point (as shown in the figure given below) interacts with the alternating current of the other side resulting in the production of torque

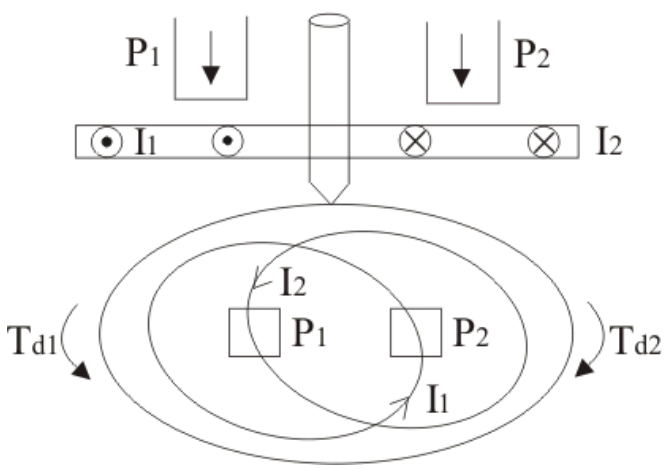

Similarly, the emf produced at the point two interacts with the alternating current at point one, resulting in the production of torque again but in opposite direction. Hence due to these two torques which are in different directions, the metallic disc moves.This is basic principle of working of an **induction type meters**. Now let us derive the mathematical expression for deflecting torque. Let us take flux

produced at point one be equal to F_1 and the flux and at point two be equal to F_2. Now the instantaneous values of these two flux can written as:

$$F_1 = F_{m1} sin\omega t, \quad F_2 = F_{m2} sin(\omega t - B)$$

Where, F_{m1} and F_{m2} are respectively the maximum values of fluxes F_1 and F_2, B is phase difference between two fluxes. We can also write the expression for induced emf's at point one be

$$E_1 = -\frac{d(F_1)}{dt} \; and \; E_2 = -\frac{d(F_2)}{dt}$$

at point two. Thus we have the expression for eddy currents at point one is

$$I_1 = \frac{E_1}{Z} = K \times f \times F_1$$

Where, K is some constant and f is frequency. Let us draw phasor diagram clearly showing F_1, F_2, E_1, E_2, I_1 and I_2. From phasor diagram, it clear that I_1 and I_2 are respectively lagging behind E_1 and E_2 by angleA

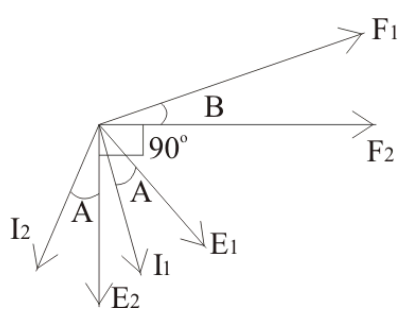

.

The angle between F_1 and F_2 is B. From the phasor diagram the angle between F_2 and I_1 is (90- B+A) and the angle between F_1 and I_2 is (90 + B + A). Thus we write the expression for deflecting torqueas

$$T_{d1} = K \times F_2 \times I_1 \times cos(90 - B + A) = K \times F_1 \times F_2 \times \frac{f}{Z} cos(90 - B + A),$$

Similarly the expression for T_{d2} is

$$T_{d2} = K \times F_1 \times F_2 \times \frac{f}{Z} cos(90 + A + B)$$

,

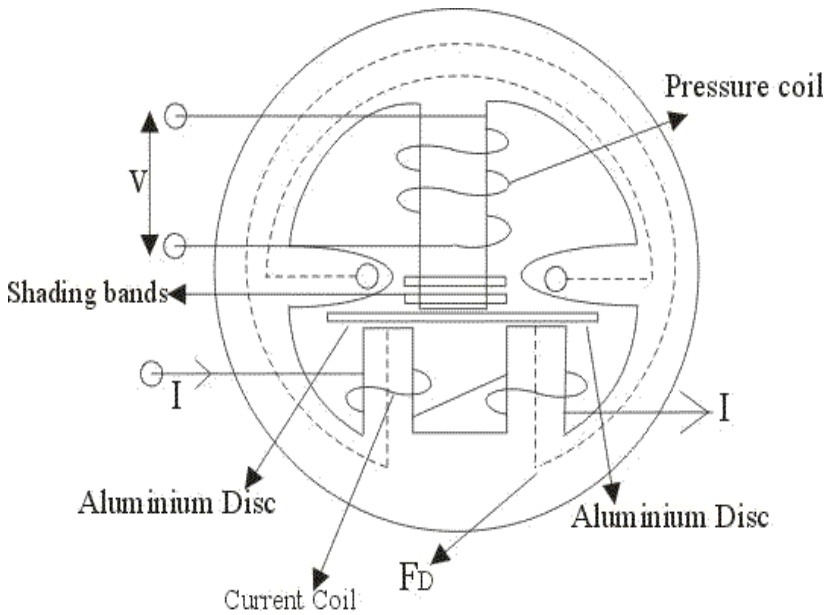

The total torque is T_{d1} - T_{d2}, on substituting the the value of T_{d1} and T_{d2} and simplying the expression we get

$$T_{d1} - T_{d2} = K \times F_1 \times F_2 \times \frac{f}{Z} sin(B)cos(A),$$

Which is known as the general expression for the deflecting torque in the **induction type meters**. Now there are two types of induction meters and they are written asfollows:

- Single phasetype
- Three phase type inductionmeters.

Here we are going to discuss about the single phase induction type in detail. Given below is the picture of single phase induction type meter.

Single phase induction type energy meterconsists of four important systems which are written as follows:

Driving System: Driving system consists of two electromagnets on which pressure coil and current coils are wounded, as shown above in the diagram. The coil which consisted of load current is called current coil while coil which is in parallel with the supply voltage (i.e. voltage across the coil is same as the supply voltage) is called pressure coil. Shading bands are wounded on as shown above in the diagram so as to make angle between the fluxand and applied voltage equal to 90 degrees. Moving System: In order to reduce friction to greater extent floating shaft energy meter is used, the friction is reduced to greater extinct because the rotating disc which is made up of very light material like aluminiumis not in contact with any of the surface. It floats in the air. One question must be arise in our mind is that how the aluminium disc float in the air? To answer this question we need to see the constructional details of this special disc, actually it consists of small magnets on both upper and lower surfaces. The upper magnet is attracted to an electromagnet in upper bearing while the lower surface magnet also attracts towards the lower bearing magnet, hence due to these opposite forces the light rotating aluminium discfloats.

Braking System: A permanent magnet is used to produce breaking torque in single phase induction energy meters which are positioned near the corner of the aluminium disc.

Counting System: Numbers marked on the meter are proportion to the revolutions made by the aluminium disc, the main function of this system is to record the number of revolutions made by the aluminium disc. Now let us look at the working operation of the single phase induction meter. In order to understand the working of this meter let us consider the diagram givenbelow:

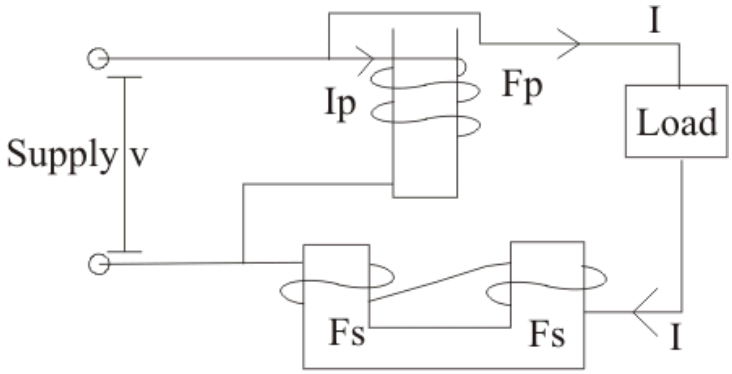

Here we have assumed that the pressure coil is highly inductive in nature and consists of very large number of turns. The current flowin in the pressure coil is I_p which lags behind voltage by an angle of 90 degrees. This current produces fluxF. F is divided into two parts F_g and F_p.

1. F_g which moves on the small reluctance part across the sidegaps.
2. F_p: It is responsible for the production of driving torque in the aluminium disc. It moves from high reluctance path and is in phase with the current in the pressure coil. F_p is alternating in nature and thus emf E_p and current I_p. The load current which is shown in the above diagramis flowing through the current coil produces flux in the aluminium disc, and due this alternating flux there on the metallic disc, an eddy currentis produced which interacts with the flux F_p which results in production of torque. As we have two poles, thus two torques are produced which are opposite to each other. Hence from the theory of induction meter that we have discussed already above the net torque is the difference of the twotorques.

Advantages of Induction Type Meters

Following are the advantages of induction type meters:

1. They are inexpensive as compared to moving iron typeinstruments.
2. They have high torque is to weight ratio as compared to otherinstruments.
3. They retain their accuracy over wide range of temperature as well asloads.

THREE PHASE ENERGY METER

Introduction

It is well established that for measurement of total power or energy in a n-conductor system, it is required to use a meter with (n-1) elements. The principle of single phaseenergy meter can as well be extended to obtain a poly-phase energy meter, inparticular a three phase energy meter. Usually, a three phase energy meter is availableas a 2-element meter or 3-element meter, each element being similar in construction tothe single phase meter and all elements mounted on a common shaft. The torquedeveloped by each element is summed up mechanically and the total number ofrevolutionsmade by the shaft is proportional to the total three phase energy consumption.

Construction, Operation and Testing

In a two-element, three phase energy meter the two discs are mounted on a common spindle and each disc has its own brake magnet. The moving system drives a single gear train. Each unit is provided with its own copper shading ring, shading band, friction compensator, etc., for adjustments to be made to obtain the correct reading.

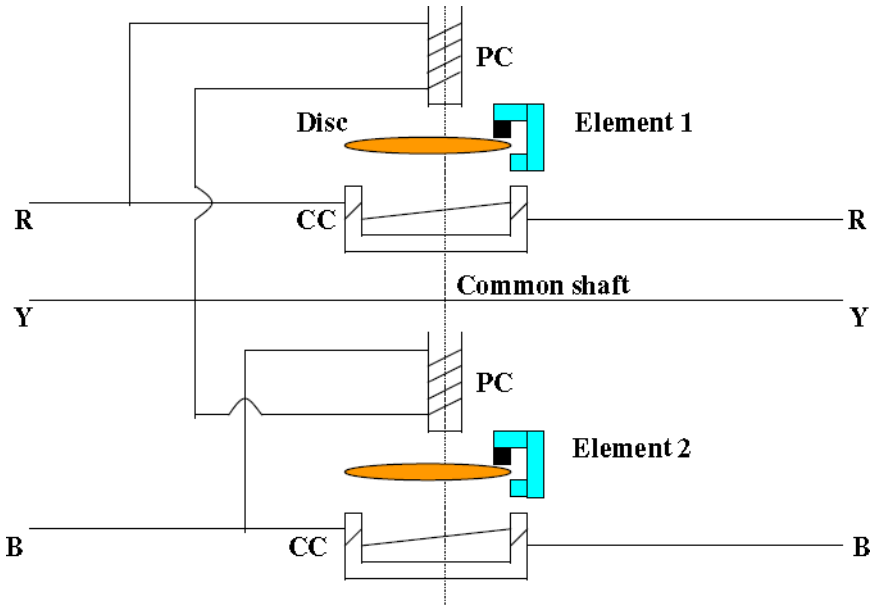

Figure 8.7 Three Phase Energy Meter

A two element energy meter used for three phase energy measurements in three phase three wire systems, is schematically shown in figure 8.7. It is needful that for the same power/ energy, the driving torque should be equal in the two elements. This is checked by torque adjustment. For torque adjustment, the two current coils are connected in series opposition and the two potential coils are connected in parallel. Full load current is allowed to pass through the current coil. This set up causes the two torques to be in opposition and so, if the torques are equal, then the disc should not move. If there is any slight motion indicating inequality of the two torques, then the magnetic shunt is adjusted until the disc stalls. Thus the torque balancing is obtained beforetesting the meter. The friction compensator and brake magnet positions are adjusted to each of the two/three elements separately, treating each of them as a single phase element on single phase AC supply. The calibration of three phase meter can also be performed in a similar manner, as that described earlier, for single phase energymeters.

ERRORS IN ENERGY METERS

The energy measurements by energy meters involve errors owing to many sources and reasons as follows:

1. **Errors in driving system** include errors due to incorrect magnitude of flux

values, phase angles, etc. and lack of symmetry in magnetic circuit.

2 **Errors in braking system** such as changes in the strength of brake magnet, changes in disc resistance, self braking effect of series magnet flux and abnormal friction of the movingparts. 3 Errors in registering system are also expected to be present sincethey

involve mechanical parts. They are taken care of by calibration of the meter.

4 errors caused due to friction, overloads, phaseangle

variations, temperature effects, creeping of the meter, etc.

These errors are avoided by correct adjustments made using

the various compensator facility provided on the meter.

Adjustments

Full Load UPF Adjustment: The potential coil is connected across rated supply voltage and rated full load current at unity power factor is passed through the current coil. The brake magnet position is adjusted to vary the braking torque so that the moving system moves at correctspeed.

Lag or LPF adjustment: It is clear from equation (8.10) that the energy meter will register correct value only if the angle between the shunt magnet flux, f Pand the supply voltage, V is 900 (D = 900). Hence the pressure coil should be designed to be highly inductive. Also, various lag adjustment devices are made use of for this purpose. For LPF adjustments, the pressure coil is connected across the rated supply voltage and rated full load current at 0.5 lagging power factor is passed through the current coil. The lag device is adjusted until the meterrunsattruespeed.

Light Load UPF Adjustment: Firstly, full load UPF and LPF adjustments are made on the meter until it runs at correct speed. Then rated supply voltage is applied across the pressure coil and a very low current of 5-10 % of full load value is passed through the meter at unity power factor. The light load adjustment is done so that the meter runs at properspeed.

Creep Adjustment: Firstly, full load UPF and light load adjustments are made for correct speeds at both the loads and the performance is rechecked at0.5 power factor. Then, as a final check on all the above adjustments, the pressure coil is excited by 110 % of the rated voltage with zero load current. If the light load adjustment is proper, the meter should not creep under these conditions. If the error still persists, then all the above adjustments are carried out onceagain

UNIT – III

DC&AC BRIDGES

MEASUREMENT OF RESISTANCE

Resistanceis one of the most basic elements encountered in electrical and electronics engineering. The value of resistance in engineering varies from very small value like, resistance of a transformer winding, to very high values like, insulation resistance of that same transformerwinding. Although a multimeter works quite well if we need a rough value of resistance, but for accurate values and that too at very low and very high values we need specific methods. In this article we will discuss various methods of resistance measurement. For this purpose we categories the resistance into threeclasses-

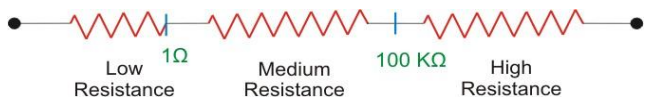

MEASUREMENT OF LOW RESISTANCE (<1Ω)

The major problem in **measurement of low resistance** values is the contact resistance or lead resistance of the measuring instruments, though being small in value is comparable to the resistance being measured and hence causes serious error

The methods employed for measurement of low resistances are:-

- Kelvin's Double Bridge Method
- PotentiometerMethod
- DucterOhmmeter.

KELVIN'S DOUBLE BRIDGE

Kelvin's double bridgeis a modification of simple Wheatstone bridge. Figure below shows the circuit diagram of Kelvin's double bridge.

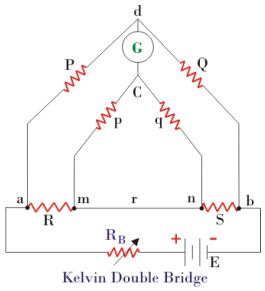

As we can see in the above figure there are two sets of arms, one with resistances P and Q and other with resistances p and q. R is the unknown low resistance and S is a standard resistance. Here r represents the contact resistance between the unknown resistance and the standard resistance, whose effect we need to eliminate. For measurement we make the ratio P/Q equal to p/q and hence a balanced Wheatstone bridge is formed leading to null deflection in the galvanometer. Hence for a balanced bridge we can write

$$E_{ad} = E_{amc}$$

$$Or,\ \left\{\frac{P}{P+Q}\right\} E_{ab} = I\left[R + \frac{p}{p+q}\left\{\frac{r(p+q)}{p+q+r}\right\}\right] \ .....(1)$$

$$Where,\ E_{ab} = I\left[R + S + \frac{p}{p+q}\left\{\frac{r(p+q)}{p+q+r}\right\}\right] \ .....(2)$$

Putting eqn 2 in 1 and solving and using P/Q = p/q, we get-

$$R = \frac{P}{Q}S$$

Hence we see that by using balanced double arms we can eliminate the contact resistance completely and hence error due to it. To eliminate another error caused due to thermo-electric emf, we take another reading with batteryconnection reversed and finally take average of the two readings. This bridge is useful for resistances in range of 0.1μΩ to 1.0Ω.

MEASUREMENT OF MEDIUM RESISTANCE (1Ω - 100KΩ)

Following are the methods employed for measuring a resistance whose value is in the range 1Ω - 100kΩ -

- Ammeter-VoltmeterMethod
- Wheatstone BridgeMethod
- SubstitutionMethod
- Carey- Foster BridgeMethod
- OhmmeterMethod

WHEATSTONE BRIDGE METHOD

This is the simplest and the most basic bridge circuit used in measurement studies. It mainly consists of four arms of resistance P, Q; R and S. R is the unknown resistance under experiment, while S is a standard resistance. P and Q are known as the ratio arms. An EMF source is

connected between points a and b while a galvanometer is connected between points c and d

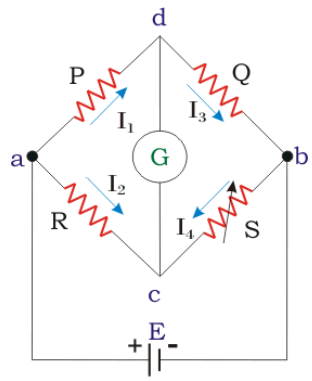

Wheatstone Bridge

A bridge circuit always works on the principle of null detection, i.e. we vary a parameter until the detector shows zero and then use a mathematical relation to determine the unknown in terms of varying parameter and other constants. Here also the standard resistance, S is varied in order to obtain null deflection in the galvanometer. This null deflection implies no current from point c to d, which implies that potential of point c and d is same.Hence

$$I_1 P = I_2 R \ldots\ldots (4)$$

$$Also,\ I_1 = I_3 = \frac{E}{(P+Q)}\ and\ I_2 = I_4 = \frac{E}{(R+S)} \ldots\ldots (5)$$

Combining the above two equations we get the famous equation –

$$R = \frac{P}{Q} S$$

MEASUREMENT OF HIGH RESISTANCE (>100KΩ)

Following are few methods used for measurement of high resistance values-

- Loss of ChargeMethod
- Megger
- Megohm bridgeMethod
- Direct DeflectionMethod

LOSS OF CHARGE METHOD

In this method we utilize the equation of voltage across a discharging capacitorto find the value of unknown resistance R. Figure below shows the circuit diagram a

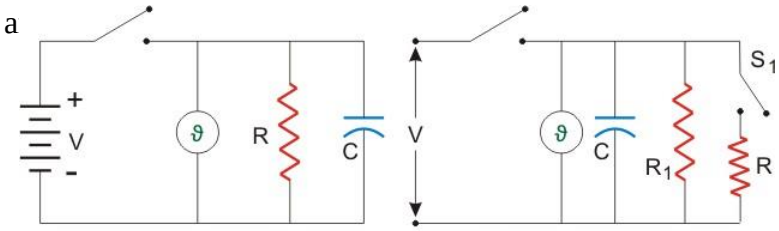

Loss of Charge Method

are-

$$v = Ve^{\frac{-t}{RC}}$$
$$R = \frac{0.4343t}{C\ log_{10}V/v}$$

However the above case assumes no leakage resistance of the capacitor. Hence to account for it we use the circuit shown in the figure below. R_1 is the leakage resistance of C and R is the unknown resistance. We follow the same procedure but first with switch S_1 closed and next with switch S_1 open. For the first case we

$$R' = \frac{0.4343t}{C\ log_{10}V/v}$$
$$Where,\ R' = \frac{RR_1}{R + R_1}$$

get

For second case with switch open we get

$$R_1 = \frac{0.4343t}{C\ log_{10}V/v}$$

Using R_1 from above equation in equation for R' we can find R.

AC BRIDGES

General form of A.C.bridge

AC bridge are similar to D.C. bridge in topology(way of connecting).It consists of four arm AB,BC,CD and DA .Generally the impedance to be measured is connected between ‘A’ and ‘B’. A detector is connected between ‘B’ and ’D’. The detector is used as null deflection instrument. Some of the arms are variable element. By varying these elements, the potential values at ‘B’ and ‘D’ can be made equal. This is called balancing of thebridge.

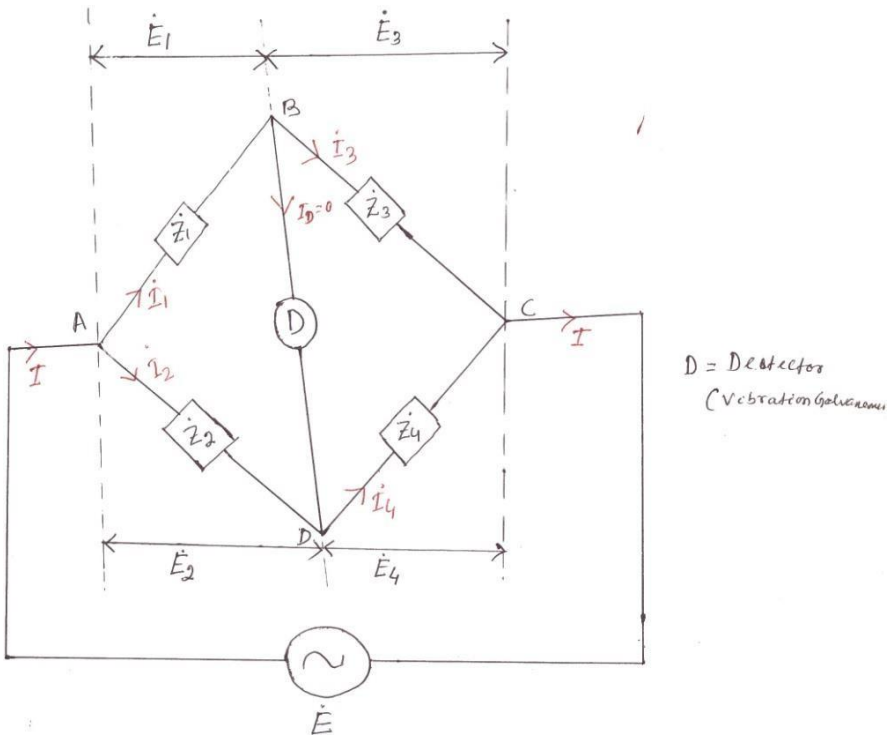

Fig. 2.1 General form of A.C. bridge

At the balance condition, the current through detector iszero.

$$\therefore \dot{I}_1 = \dot{I}_3$$

$$\dot{I}_2 = \dot{I}_4$$

$$\therefore \frac{\dot{I}_1}{\dot{I}_2} = \frac{\dot{I}_3}{\dot{I}_4} \qquad (2.1)$$

At balance condition,

Voltage drop across ‘AB’=voltage drop across ‘AD’.

$$\dot{E}_1 = \dot{E}_2$$

$$\therefore \dot{I}_1 \dot{Z}_1 = \dot{I}_2 \dot{Z}_2 \qquad (2.2)$$

Similarly, Voltage drop across ‘BC’=voltage drop across ‘DC’

$$\dot{E}_3 = \dot{E}_4$$

$$\therefore \dot{I}_3 \dot{Z}_3 = \dot{I}_4 \dot{Z}_4 \qquad (2.3)$$

From Eqn. (2.2), we have $\therefore \dfrac{\dot{I}_1}{\dot{I}_2} = \dfrac{\dot{Z}_2}{\dot{Z}_1}$ (2.4)

From Eqn. (2.3), we have $\therefore \dfrac{\dot{I}_3}{\dot{I}_4} = \dfrac{\dot{Z}_4}{\dot{Z}_3}$ (2.5)

From equation -2.1, it can be seen that, equation -2.4 and equation-2.5 are equal.

$$\therefore \frac{\dot{Z}_2}{\dot{Z}_1} = \frac{\dot{Z}_4}{\dot{Z}_3}$$

$$\therefore \dot{Z}_1 \dot{Z}_4 = \dot{Z}_2 \dot{Z}_3$$

Products of impedances of opposite arms are equal.

$$\therefore |Z_1| \angle \theta_1 \, |Z_4| \angle \theta_4 = |Z_2| \angle \theta_2 \, |Z_3| \angle \theta_3$$

$$\Rightarrow |Z_1 Z_4| \angle \theta_1 + \theta_4 = |Z_2 Z_3| \angle \theta_2 + \theta_3$$

$$|Z_1 Z_4| = |Z_2 Z_3|$$

$$\theta_1 + \theta_4 = \theta_2 + \theta_3$$

* For balance condition, magnitude on either side must beequal.

* Angle on either side must beequal.

Summary

For balance condition,

- $\dot{I}_1 = \dot{I}_3$, $\dot{I}_2 = \dot{I}_4$
- $Z_1 Z_4 \quad | \quad = Z_2 Z_3 \quad |$
- $\theta_1 + \theta_4 = \theta_2 + \theta_3$
- $\dot{E}_1 = \dot{E}_2$ & $\dot{E}_3 = \dot{E}_4$

Types of detector

The following types of instruments are used as detector in A.C. bridge.

- Vibrationgalvanometer
- Head phones (speaker)
- Tunedamplifier

Vibrationgalvanometer

Between the point 'B' and 'D' a vibration galvanometer is connected to indicate the bridge balance condition. This A.C. galvanometer which works on the principle of resonance. The A.C. galvanometer shows a dot, if the bridge is unbalanced.

Headphones

Two speakers are connected in parallel in this system. If the bridge is unbalanced, the speaker produced more sound energy. If the bridge is balanced, the speaker do not produced any soundenergy.

Tunedamplifier

If the bridge is unbalanced the output of tuned amplifier is high. If the bridge is balanced, output of amplifier is zero.

Measurements of inductance

Maxwell's inductancebridge

The choke for which R_1 and L_1 have to measure connected between the points 'A' and 'B'. In this method the unknown inductance is measured by comparing it with the standard inductance.

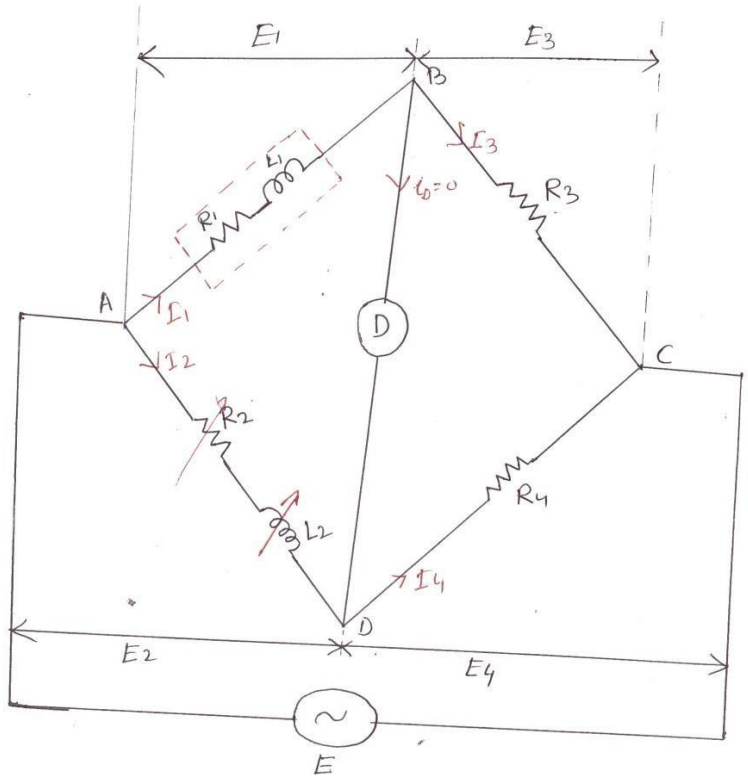

Fig. 2.2 Maxwell's inductance bridge L_2 is

adjusted, until the detector indicates zero current.

Let R_1= unknown resistance

L_1= unknown inductance of the choke. L_2=

known standard inductance R_1,R_2,R_4= known

resistances.

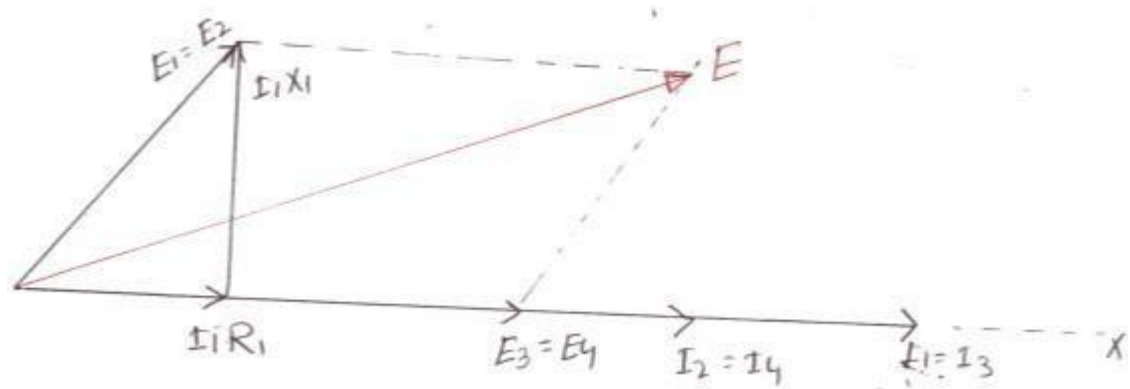

Fig 2.3 Phasor diagram of Maxwell's inductance bridge

At balance condition, $\dot{Z}_1 \dot{Z}_4 = \dot{Z}_2 \dot{Z}_3$

$(R_1 + jXL_1)R_4 = (R_2 + jXL_2)R_3$

$(R_1 + jwL_1)R_4 = (R_2 + jwL_2)R_3$

$R_1R_4 + jwL_1R_4 = R_2 R_3 + jwL_2 R_3$

Comparing real part,

$R_1R_4 = R_2 R_3$

$$\therefore R_1 = \frac{R_2R_3}{R_4} \qquad (2.6)$$

Comparing the imaginary parts,

$wL_1R_4 = wL_2 R_3$

$$L_1 = \frac{L_2 R_3}{R_4} \qquad (2.7)$$

Q-factor of choke, $Q = \frac{WL_1}{R_1} = \frac{WL_2}{} \frac{R_3R_4}{R_4R_2R_3}$

$$Q = \frac{WL_2}{R_2} \qquad (2.8)$$

Advantages

- ✓ Expression for R_1 and $L_1$are simple.
- ✓ Equations areasimple
- ✓ They do not depend on the frequency (as w iscancelled)
- ✓ R_1 and $L_1$are independent of eachother.

Disadvantages

- ✓ Variable inductor iscostly.
- ✓ Variable inductor isbulky.

Maxwell's inductance capacitancebridge

Unknown inductance is measured by comparing it with standard capacitance. In this bridge, balance condition is achieved by varying 'C_4'.

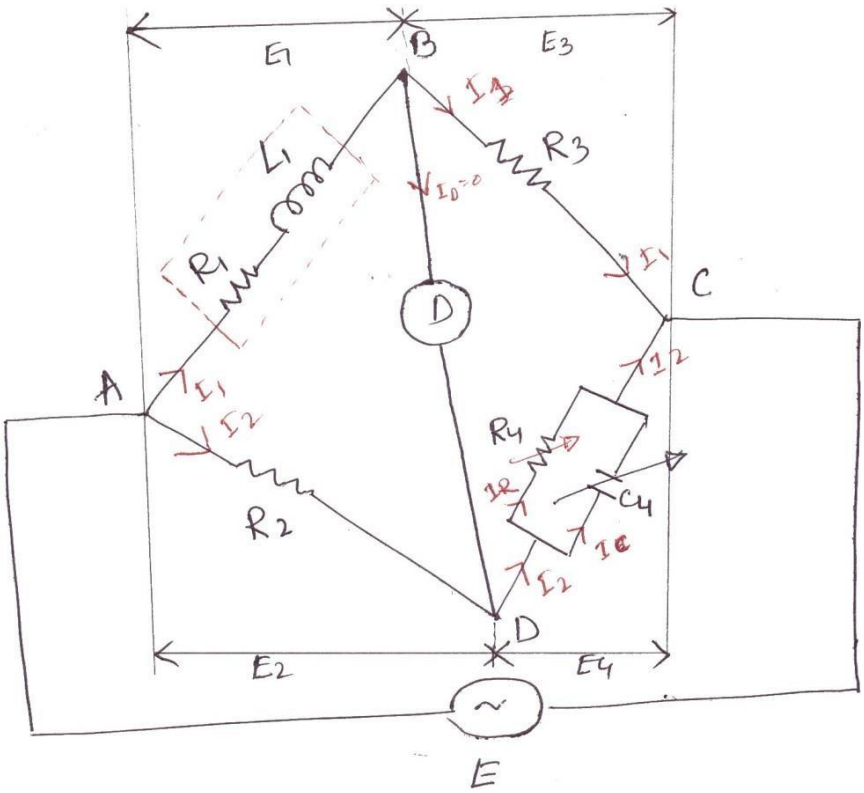

Fig 2.4 Maxwell's inductance capacitance bridge

At balancecondition, $Z_1Z_4=Z_3Z_2$ (2.9)

$$Z_4 = R_4 \parallel \frac{1}{jwC_4} = \frac{R_4 \times \frac{1}{jwC_4}}{R_4 + \frac{1}{jwC_4}}$$

$$Z_4 = \frac{R_4}{jwR_4C_4+1} = \frac{R_4}{1+jwR_4C_4} \quad (2.10)$$

$\therefore$ Substituting the value of Z_4 from eqn. (2.10) in eqn. (2.9) we get

$$(R_1 + jwL_1)\times \frac{R_4}{1+jwR_4C_4} = R_2 R_3$$

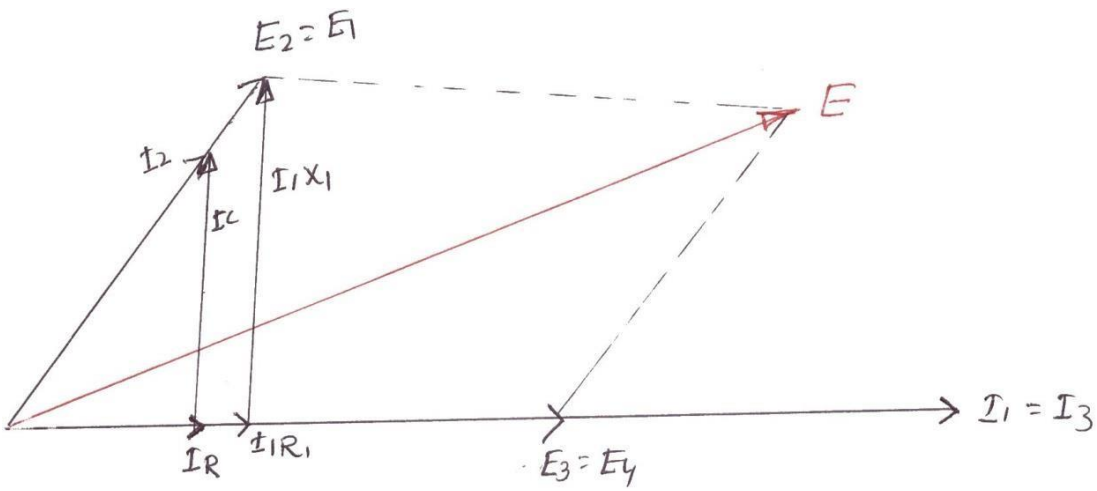

Fig 2.5 Phasor diagram of Maxwell's inductance capacitance bridge

$$(R_1 + jwL_1)R_4 = R_2 R_3 (1+jwR_4C_4)$$

$$R_1R_4 + jwL_1R_4 = R_2 R_3 + jwC_4 R_4 R_2 R_3$$

Comparing real parts,

$$R_1R_4 = R_2 R_3$$

$$\Rightarrow R_1 = \frac{R_2 R_3}{R_4} \qquad (2.11)$$

Comparing imaginary part,

$$wL_1R_4 = wC_4 R_4 R_2 R_3$$

$$L_1 = C_4R_2R_3 \qquad (2.12)$$

Q-factor of choke,

$$Q = \frac{WL_1}{R_1} = \frac{w \times C_4 R_4 R_2 R_3 \times R_4}{R_2 R_3}$$

$$Q = wC_4R_4 \qquad (2.13)$$

Advantages

- ✓ Equation of $L_1$and R_1 aresimple.
- ✓ They are independent offrequency.
- ✓ They are independent of eachother.
- ✓ Standard capacitor is much smaller in size than standardinductor.

Disadvantages

- ✓ Standard variable capacitance iscostly.
- ✓ It can be used for measurements of Q-factor in the ranges of 1 to10.
- ✓ It cannot be used for measurements of choke with Q-factors more than10. We know that $Q=wC_4R_4$

For measuring chokes with higher value of Q-factor, the value of C_4 and R_4 should be higher. Higher values of standard resistance are very expensive. Therefore this bridge cannot be used for higher value of Q-factor measurements.

Hay'sbridge

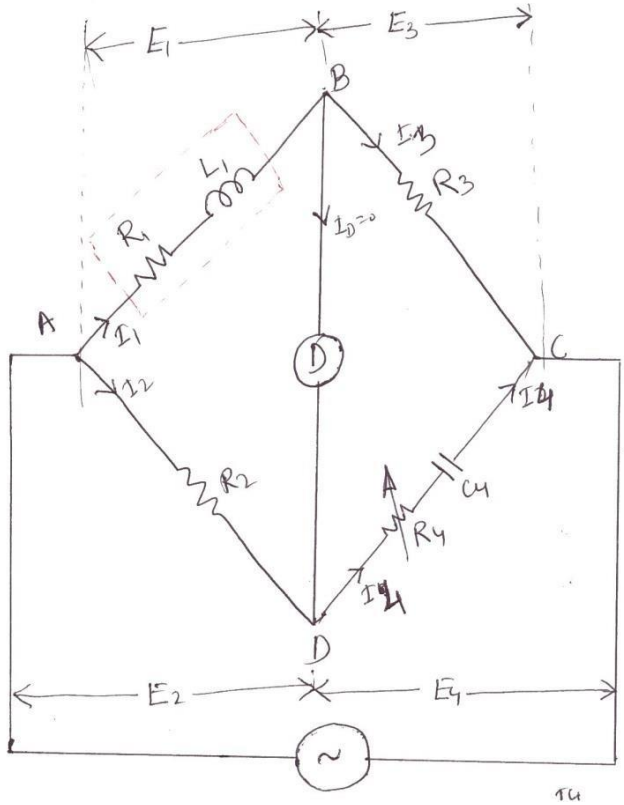

Fig 2.6 Hay's bridge

- $\dot{E}_1 = I_1 R_1 + jI_1 X_1$
- $\dot{E} = \dot{E}_1 + \dot{E}_3$
- $\dot{E}_4 = I_4 R_4 + \dot{I}_4 \dfrac{}{jwC_4}$
- $\dot{E}_3 = I_3 R_3$

$$Z_4 = R_4 + \frac{1}{jwC_4} = \frac{1 + jwR_4C_4}{jwC_4}$$

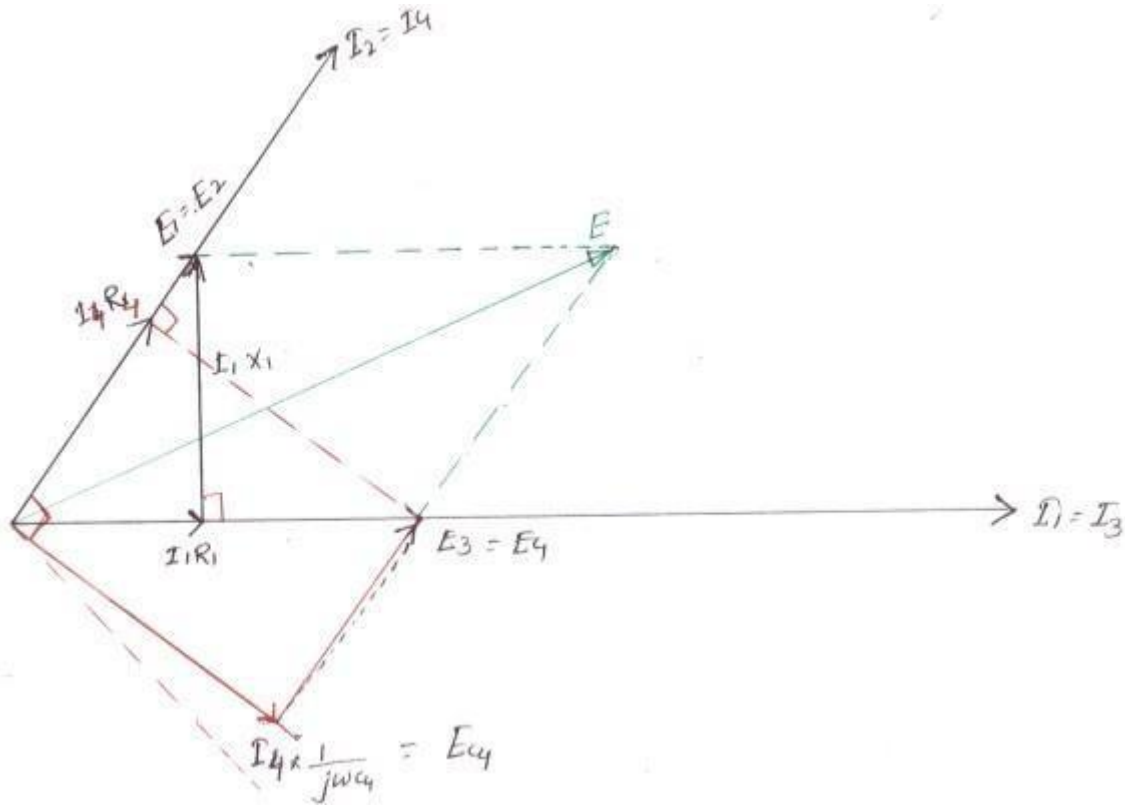

Fig 2.7 Phasor diagram of Hay's bridge

At balance condition, $Z_1Z_4=Z_3Z_2$

$$(R_1 + jwL_1)\left(1+\frac{jwR_4C_4}{jwC_4}\right) = R_2R_3$$

$$(R_1 + jwL_1)(1+jwR_4C_4) = jwR_2C_4R_3$$

$$R_1 + jwC_4R_4R_1 + jwL_1 + j^2w^2L_1C_4R_4 = jwC_4R_2R_3$$

$$(R_1 - w^2L_1C_4R_4) + j(wC_4R_4R_1 + wL_1) = jwC_4R_2R_3$$

Comparing the real term,

$$R_1 - w^2L_1C_4R_4 = 0$$

$$R_1 = w^2L_1C_4R_4 \qquad (2.14)$$

Comparing the imaginary terms,

$$wC_4R_4R_1 + wL_1 = wC_4R_2R_3$$

$$C_4 R_4 R_1 + L_1 = C_4 R_2 R_3$$

$$L_1 = C_4R_2R_3 - C_4R_4R_1 \qquad (2.15)$$

Substituting the value of R_1 fro eqn. 2.14 into eqn. 2.15, we have,

$$L_1 = C_4 R_2 R_3 - C_4 R_4 \times w^2 L_1 C_4 R_4$$

$$L_1 = C_4 R_2 R_3 - w^2 L_1 C_4^2 R_4^2$$

$$L_1(1 + w^2 L_1 C_4^2 R_4^2) = C_4 R_2 R_3$$

$$L_1 = \frac{C_4 R_2 R_3}{1 + w^2 L_1 C_4^2 R_4^2} \qquad (2.16)$$

Substituting the value of L_1 in eqn. 2.14 , we have

$$R_1 = \frac{w^2 C_4^2 R_2 R_3 R_4}{1 + w^2 C_4^2 R_4^2} \qquad (2.17)$$

$$Q = \frac{wL_1}{R_1} = \frac{w \times C_4 R_2 R_3}{1 + w^2 C_4^2 R_4^2} \times \frac{1 + w^2 C_4^2 R_4^2}{w^2 C_4^2 R_4 R_2 R_3}$$

$$Q = \frac{1}{wC_4R_4} \qquad (2.18)$$

Advantages

- ✓ Fixed capacitor is cheaper than variablecapacitor.
- ✓ This bridge is best suitable for measuring high value ofQ-factor.

Disadvantages

- ✓ Equations of L1and R1 arecomplicated.
- ✓ Measurements of R_1 and L_1require the value offrequency.
- ✓ This bridge cannot be used for measuring low Q-factor.

Owen'sbridge

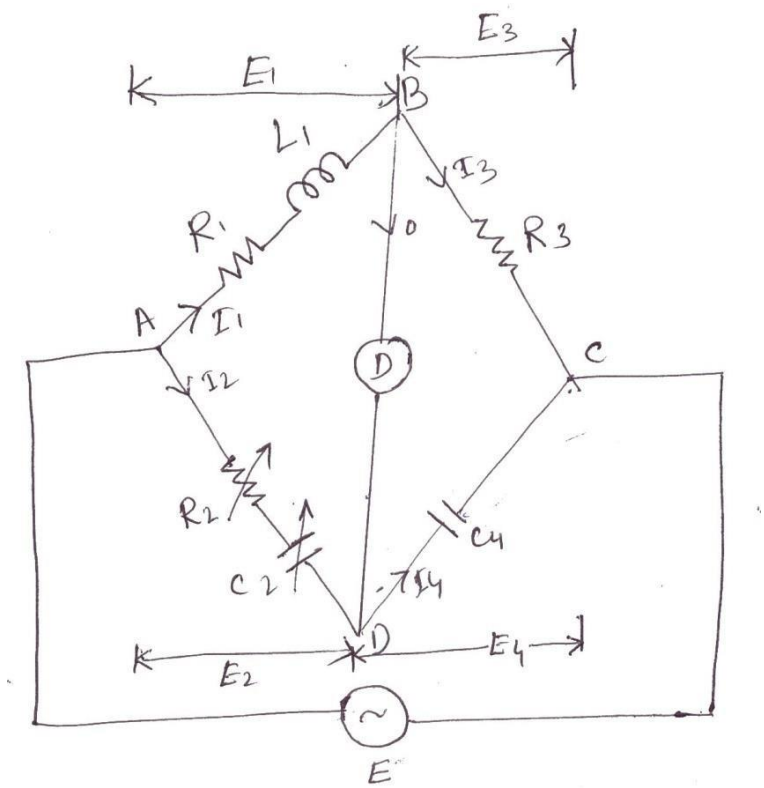

Fig 2.8 Owen's bridge

- ➢ $E_1 = I_1R_1 + jI_1X_1$
- ➢ I_4 leads E_4 by90^0

- $\dot{E} = \dot{E}_1 + \dot{E}_3$
- $\dot{E}_2 = \dot{I}_2 R_2 + \dfrac{\dot{I}_2}{jwC_2}$

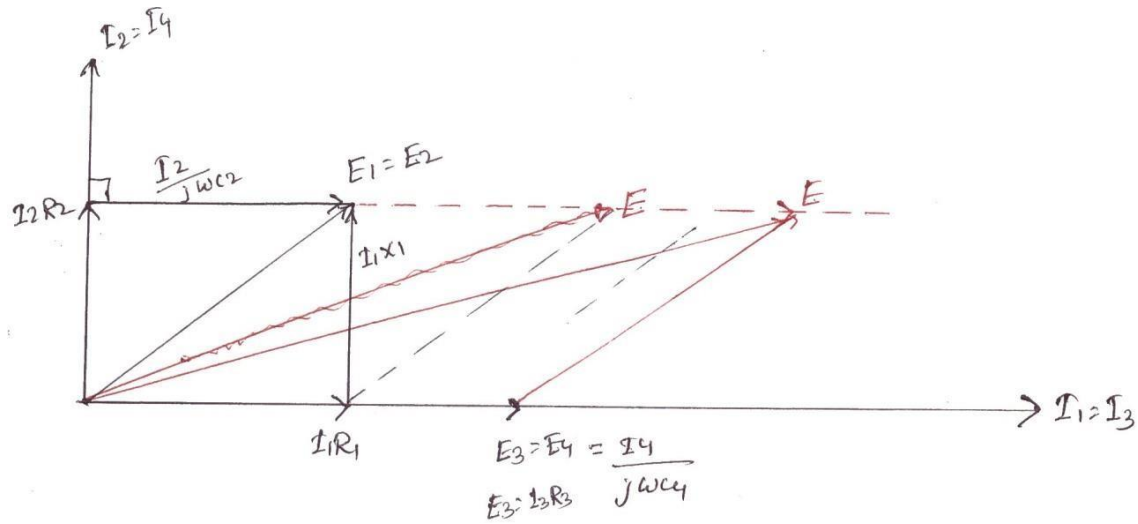

Fig 2.9 Phasor diagram of Owen's bridge

Balance condition, $\dot{Z}_1 \dot{Z}_4 = \dot{Z}_2 \dot{Z}_3$

$$Z_2 = R_2 + \frac{1}{jwC_2} = \frac{jwC_2 R_2 + 1}{jwC_2}$$

$$\therefore (R_1 + jwL_1) \times \frac{1}{jwC_4} = \frac{(1 + jwR_2C_2) \times R_3}{jwC_2}$$

$$C_2 (R_1 + jwL_1) = R_3C_4 (1 + jwR_2C_2)$$

$$R_1C_2 + jwL_1C_2 = R_3C_4 + jwR_2C_2 R_3C_4$$

Comparing real terms,

$$R_1C_2 = R_3C_4$$

$$R = \frac{R_3 C_4}{C_2}$$

Comparing imaginary terms,

$$wL_1 C_2 = wR_2 C_2 R_3 C_4$$

$$L_1 = R_2 R_3 C_4$$

$$\text{Q- factor} = \frac{WL_1}{R_1} = \frac{wR_2 R_3 C_4 C_2}{R_3 C_4}$$

$$Q = wR_2 C_2$$

Advantages

- ✓ Expression for R_1 and L_1 aresimple.
- ✓ R_1 and $L_1$are independent of Frequency.

Disadvantages

- ✓ The Circuits used twocapacitors.
- ✓ Variable capacitor iscostly.
- ✓ Q-factor range isrestricted.

Anderson'sbridge

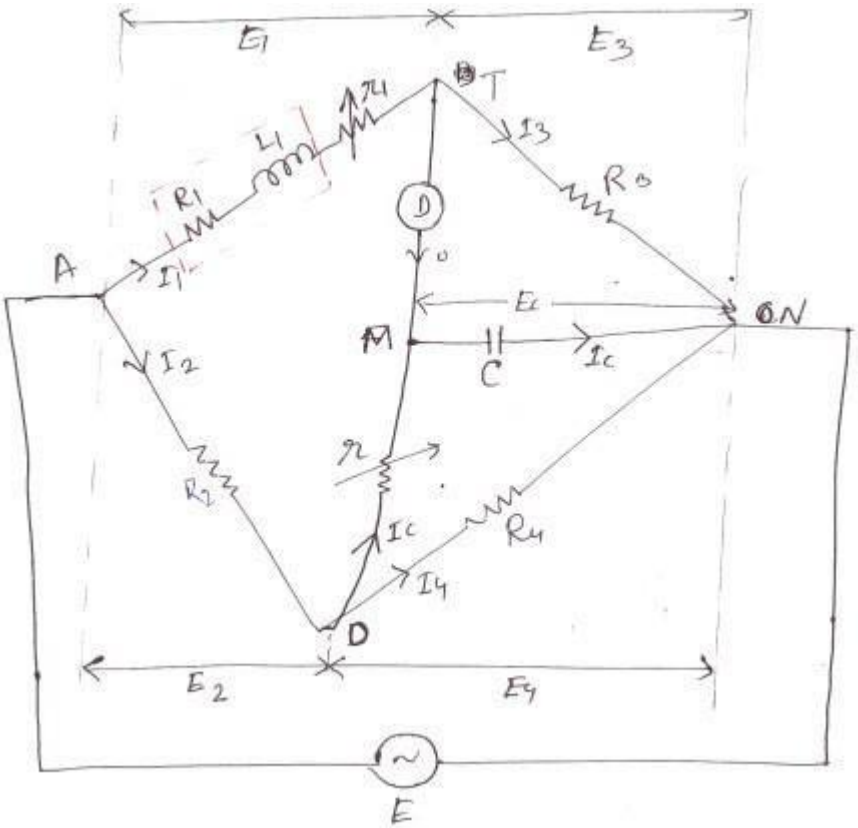

Fig 2.10 Anderson's bridge

.

- $E_1 = I_1(R_1 + r_1) + jI_1X_1$
- $E_3 = E_C$

. .

- $E_4 = I_C r + E_C$
- $I_2 = I_4 + I_C$

_ _ _

- $E_2 + E_4 = E$

_ _ _

- $E_1 + E_3 = E$

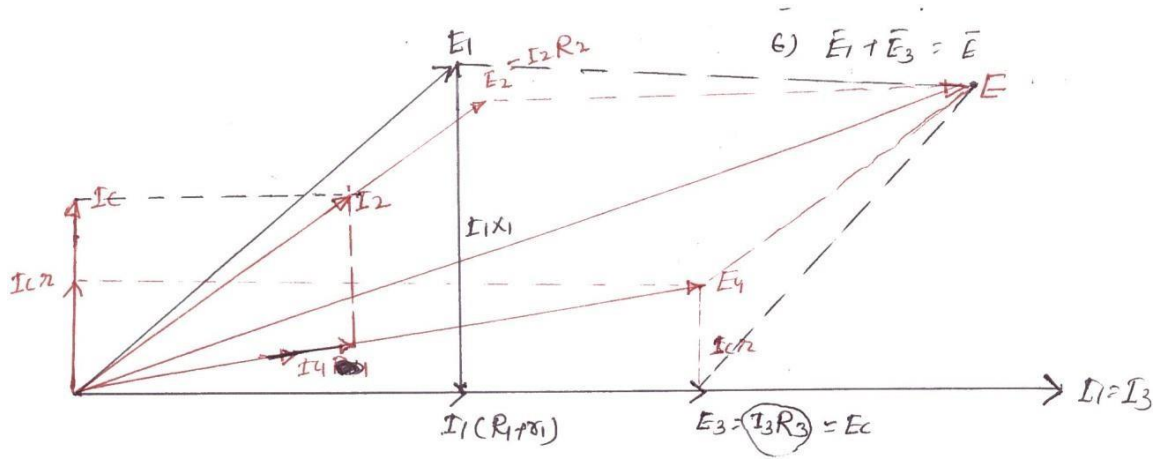

Fig 2.11 Phasor diagram of Anderson's bridge

Step-1 Take I_1 as references vector .Draw $I_1 R_1^1$ in phase with I_1

$R_1^1 = (R_1 + r_1)$, $I_1 X_1$ is $\perp_r$ to $I_1 R_1^1$

$E_1 = I_1 R_1^1 + jI_1 X_1$

Step-2 $I_1 = I_3$, E_3 is in phase with I_3 , From the circuit ,

$E_3 = E_C$, I_C leads E_C by 90^0

Step-3 $E_4 = I_C r + E_C$

Step-4 Draw I_4 in phase with E_4 , By KCL , $\bar{I}_2 = \bar{I}_4 + \bar{I}_C$

Step-5 Draw E_2 in phase with I_2

Step-6 By KVL, $\bar{E}_1 + \bar{E}_3 = \bar{E}$ or $\bar{E}_2 + \bar{E}_4 = \bar{E}$

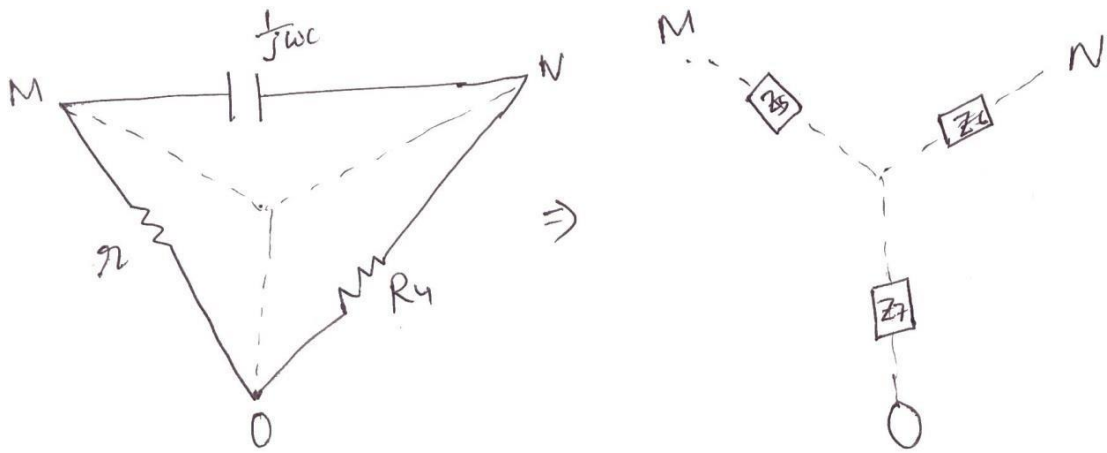

Fig 2.12 Equivalent delta to star conversion for the loop MON

$$Z_7 = \frac{R_4 \times r}{R_4 + r + \frac{1}{jwc}} = \frac{jwCR_4 r}{1 + jwC(R_4 + r)}$$

$$Z_6 = \frac{R_4 \times \frac{1}{jwC}}{R_4 + r + \frac{1}{jwc}} = \frac{R_4}{1 + jwC(R_4 + r)}$$

$$(R_1 + jwL) \times \frac{R_4}{1 + jwC(R_4 + r)} = R_3 \left(R_2 + \frac{jwCR_4 r}{1 + jwC(R_4 + r)} \right)$$

$$\Rightarrow \frac{(R_1 + jwL) R_4}{1 + jwC(R_4 + r)} = R_3 \left[\frac{R_2 (1 + jwC(R_4 + r)) + jwCrR_4}{1 + jwC(R_4 + r)} \right]$$

$$\Rightarrow R_1 R_4 + jwL R_4 = R_3 R_2 + jCwR_3 R_2 (r + R_4) + jwCrR_3 R_4$$

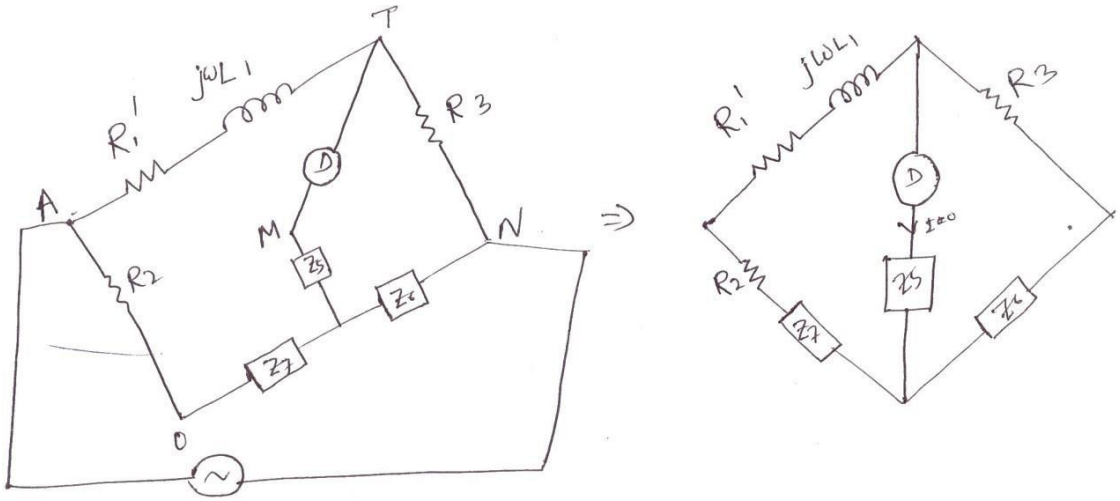

Fig 2.13 Simplified diagram of Anderson's bridge

Comparing real term,

$$R_1 R_4 = R_2 R_3$$

$$(R_1 + r_1) R_4 = R_2 R_3$$

$$R_1 = \frac{R_2 R_3}{R_4} - r_1$$

Comparing the imaginary term,

$$wL_1 R_4 = wCR_2 R_3 (r + R_4) + wcrR_3 R_4$$

$$L_1 = \frac{R_2 R_3 C}{R_4} (r + R_4) + R_3 rC$$

$$L_1 = R_3 C \left[\frac{R_2}{R_4} (r + R_4) + r \right]$$

Advantages

- ✓ Variable capacitor is notrequired.
- ✓ Inductance can be measuredaccurately.
- ✓ R_1 and $L_1$are independent offrequency.
- ✓ Accuracy is better than otherbridges.

Disadvantages

- ✓ Expression for R_1 and L_1arecomplicated.
- ✓ This is not in the standard form A.C.bridge.

Measurement of capacitance and loss angle. (Dissipationfactor)

Dissipation factors(D)

A practical capacitor is represented as the series combination of small resistance and idealcapacitance.

From the vector diagram, it can be seen that the angle between voltage and current is slightly less than 90^0. The angle ‘ δ ’ is called loss angle.

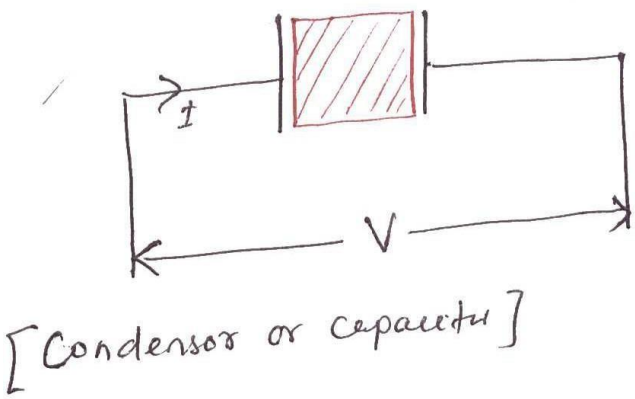

Fig 2.14 Condensor or capacitor

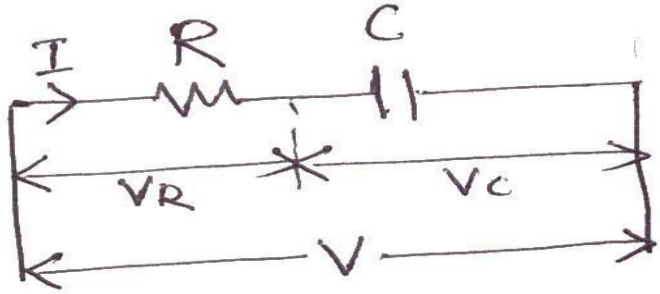

Fig 2.15 Representation of a practical capacitor

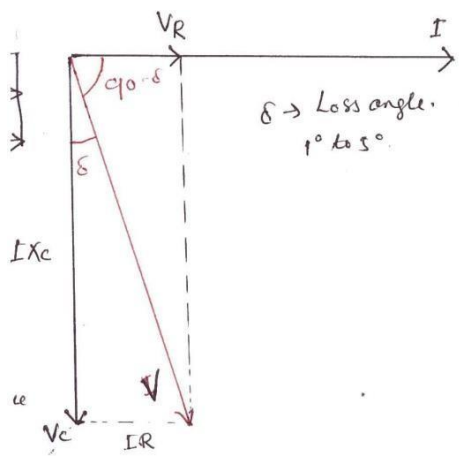

Fig 2.16 Vector diagram for a practical capacitor

A dissipation factor is defined as 'tan δ'.

$$\therefore \tan\delta = \frac{IR_R}{IX_C} = wCR\, X_C$$

$$D = wCR$$

$$D = \frac{1}{Q}$$

$$D = \tan\delta = \frac{\sin\delta}{\cos\delta} \cong \delta$$ For small value of ' δ' in radians

$D \cong \delta \cong$ LossAngle (' δ' must be inradian)

Desauty'sBridge

C_1= Unknown capacitance

At balance condition,

$$\frac{1}{jwC_1} \times R_4 = \frac{1}{jwC_2} \times R_3$$

$$\frac{R_4}{C_1} = \frac{R_3}{C_2}$$

$$\Rightarrow C_1 = \frac{R_4 C_2}{R_3}$$

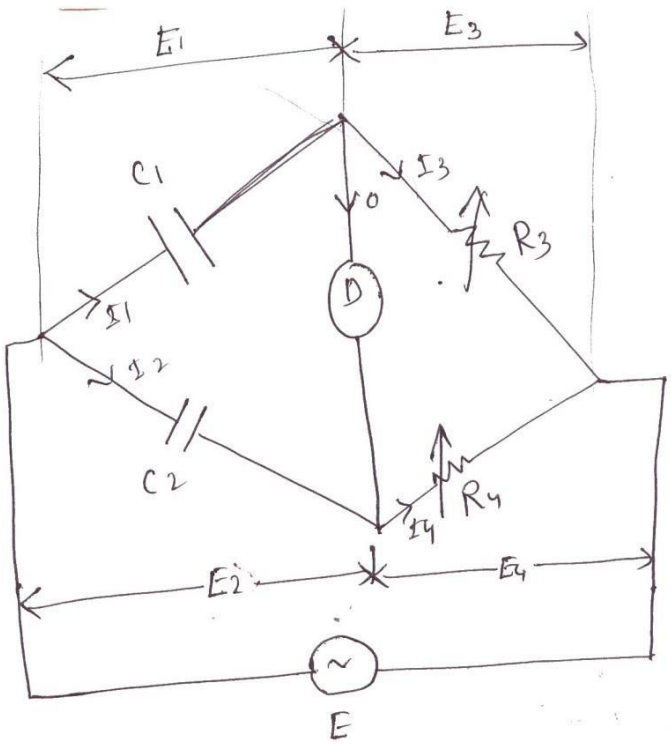

Fig 2.17 Desauty's bridge

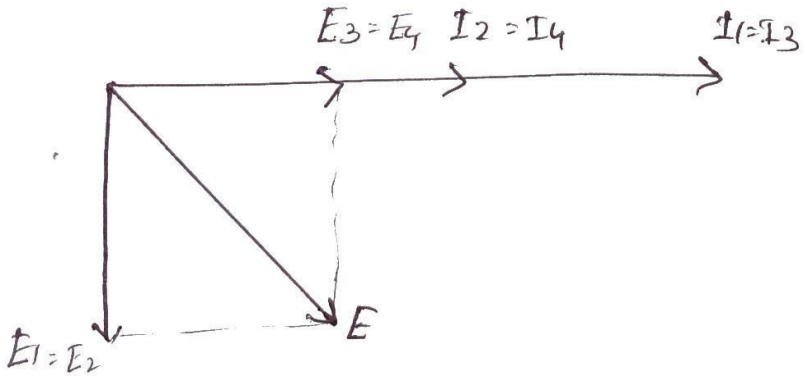

Fig 2.18 Phasor diagram of Desauty's bridge

Modified desauty'sbridge

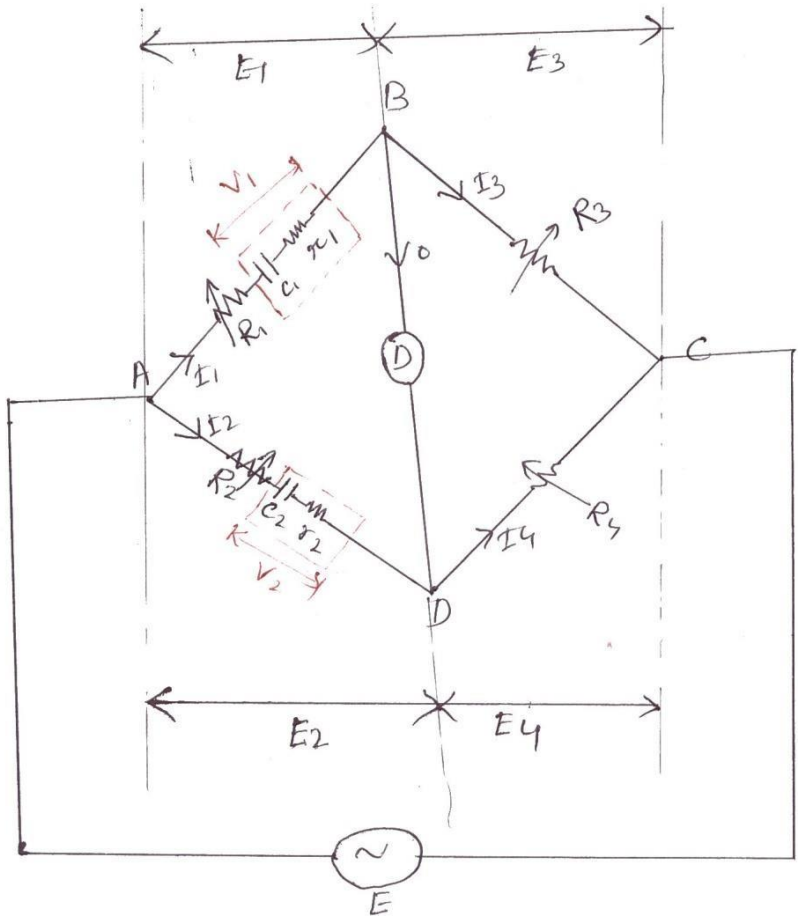

Fig 2.19 Modified Desauty's bridge

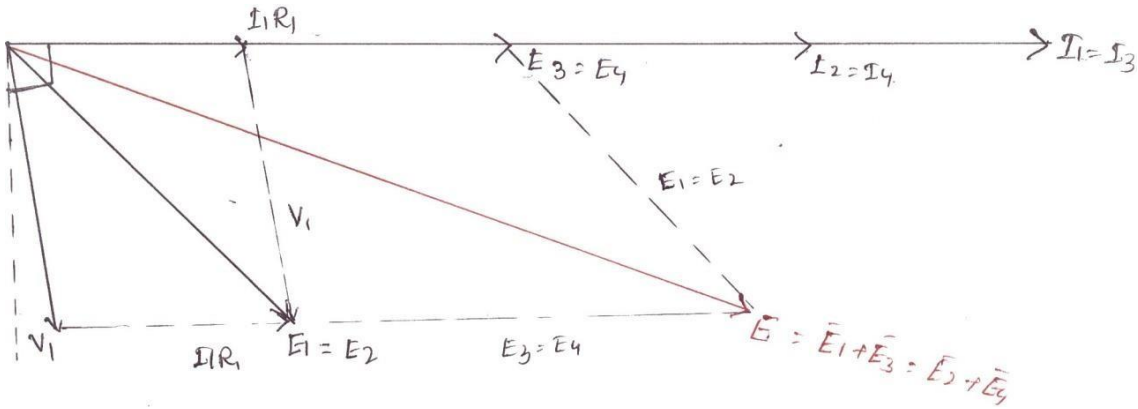

Fig 2.20 Phasor diagram of Modified Desauty's bridge

$R_1^1 = (R_1 + r_1)$

$R_2^1 = (R_2 + r_2)$

At balance condition, $(R_1^1 + \frac{1}{jwC_1})R_4 = R_3(R_2^1 + \frac{1}{jwC_2})$

$R_1^1 R_4 + \frac{R_4}{jwC_1} = R_3 R_2^1 + \frac{R_3}{jwC_2})$

Comparing the real term, $R_1^1 R_4 = R_3 R_2^1$

$R_1 = \frac{R_3 R_2^1}{R_4}$

$R + r_1 = \frac{(R_2 + r_2)R_3}{R_4}$

Comparing imaginary term,

$\frac{R_4}{wC_1} = R_3 \frac{wC_2}{}$

$C = R_4 C_2 \frac{1}{R_3}$

Dissipation factor $D = wC_1 r_1$

Advantages

- ✓ r_1 and c_1 are independent offrequency.
- ✓ They are independent of eachother.
- ✓ Source need not be pure sinewave.

Scheringbridge

$E_1 = I_1 r_1 - jI_1 X_4$

$C_2 = C_4$= Standard capacitor (Internal resistance=0)

C_4= Variable capacitance.

C_1= Unknown capacitance.

r_1= Unknown series equivalent resistance of the capacitor.

R_3=R_4= Known resistor.

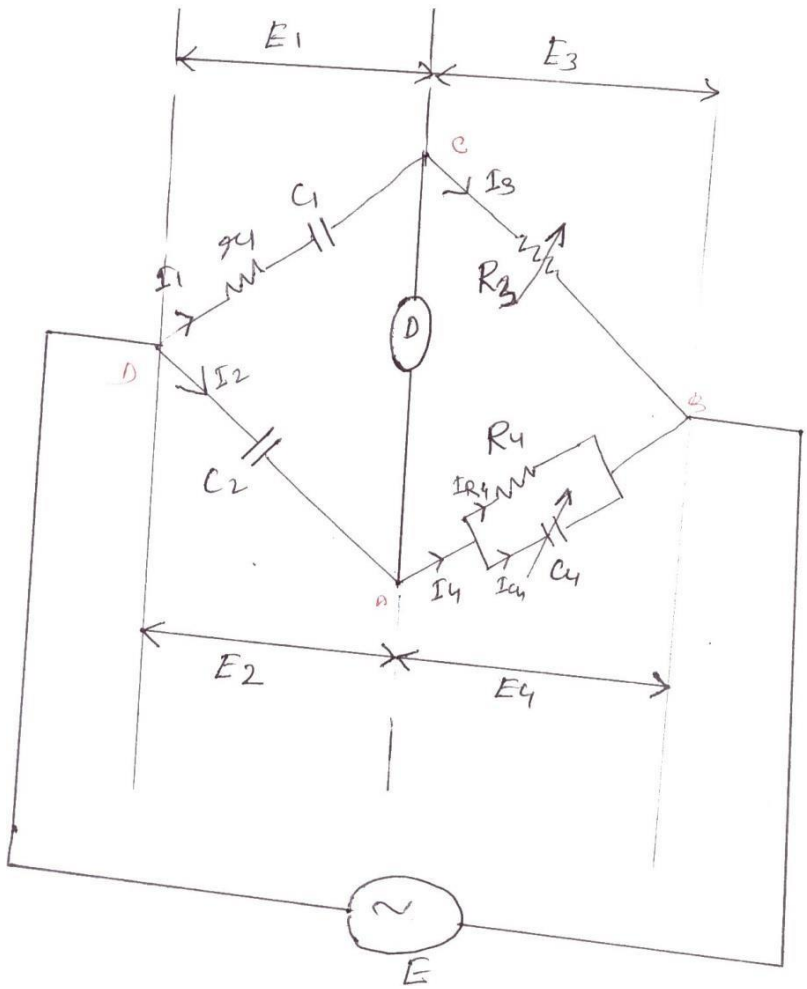

Fig 2.21 Schering bridge

$$Z_1 = r_1 + \frac{1}{jwC_1} = \frac{jwC_1 r_1 + 1}{jwC_1}$$

$$Z_4 = \frac{R_4 \times \frac{1}{jwC_4}}{R_4 + \frac{1}{jwC_4}} = \frac{R_4}{1 + jwC_4 R_4}$$

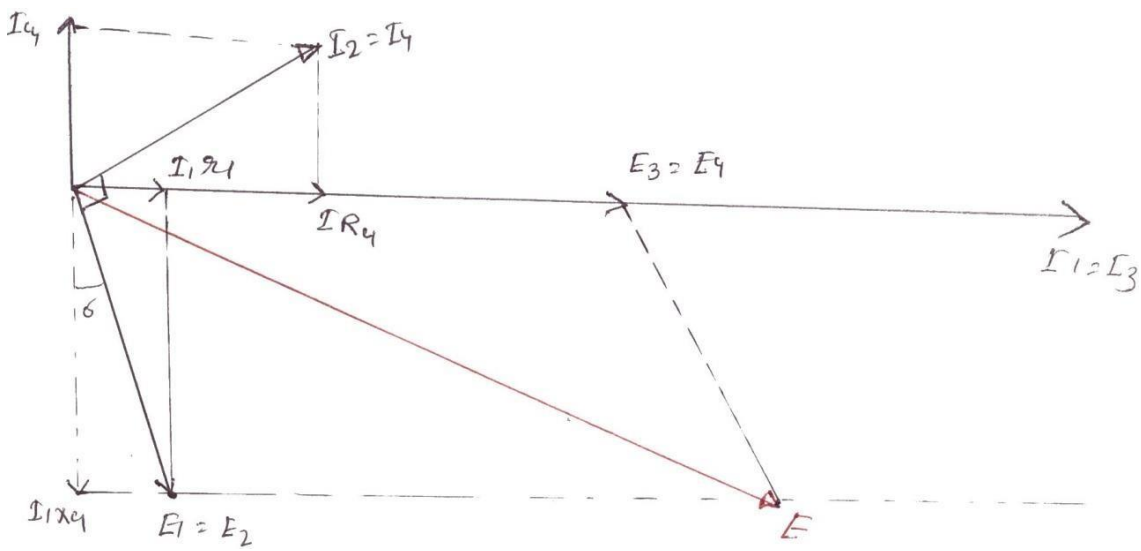

Fig 2.22 Phasor diagram of Schering bridge

At balance condition, $\dot{Z}_1 \dot{Z}_4 = \dot{Z}_2 \dot{Z}_3$

$$\frac{1+jwC_1r_1}{jwC_1} \times \frac{R_4}{1+jwC_4R_4} = \frac{R_3}{jwC_2}$$

$$(1+jwC_1r_1)R_4C_2 = R_3C_1(1+jwC_4r_4)$$

$$R_2C_2 + jwC_1r_1R_4C_2 = R_3C_1 + jwC_4R_4R_3C_1$$

Comparing the real part,

$$\therefore C = \frac{R_4C_2}{R_3}$$

Comparing the imaginary part,

$$wC_1r_1R_4C_2 = wC_4R_3R_4C_1$$

$$r = \frac{C_4R_3}{C_2}$$

Dissipation factor of capacitor,

$$D_{11} = wC_1 r_1 = w \times \frac{R_4 C_2}{R_3} \times \frac{C_4 R_3}{C_2}$$

$$\therefore D = wC_4 R_4$$

Advantages

- ✓ In this type of bridge, the value of capacitance can be measuredaccurately.
- ✓ It can measure capacitance value over a widerange.
- ✓ It can measure dissipation factoraccurately.

Disadvantages

- ✓ It requires twocapacitors.
- ✓ Variable standard capacitor iscostly.

Measurements of frequency

Wein'sbridge

Wein's bridge is popularly used for measurements of frequency of frequency. In this bridge, the value of all parameters are known. The source whose frequency has to measure is connected as shown in the figure.

$$Z_1 = r_1 + \frac{1}{jwC_1} = \frac{jwC_1 r_1 + 1}{jwC_1}$$

$$Z_2 = \frac{R_2}{1 + jwC_2 R_2}$$

At balance condition, $Z_1 Z_4 = Z_2 Z_3$

$$\frac{jwC_1 r_1 + 1}{jwC_1} \times R_4 = \frac{R_2}{1 + jwC_2 R_2} \times R_3$$

$$(1 + jwC_1 r_1)(1 + jwC_2 R_2) R_4 = R_2 R_3 \times jwC_1$$

$$\left[1 + jwC_2 R_2 + jwC_1 r_1 - w^2 C_1 C_2 r_1 R_2\right] = jwC_1 \frac{R_2 R_3}{R_4}$$

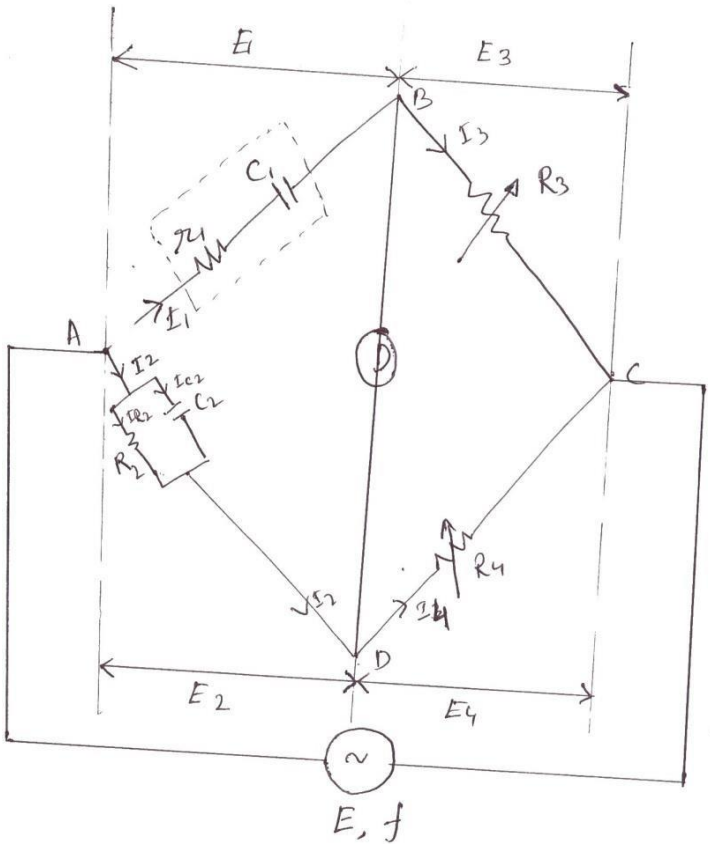

Fig 2.23 Wein's bridge

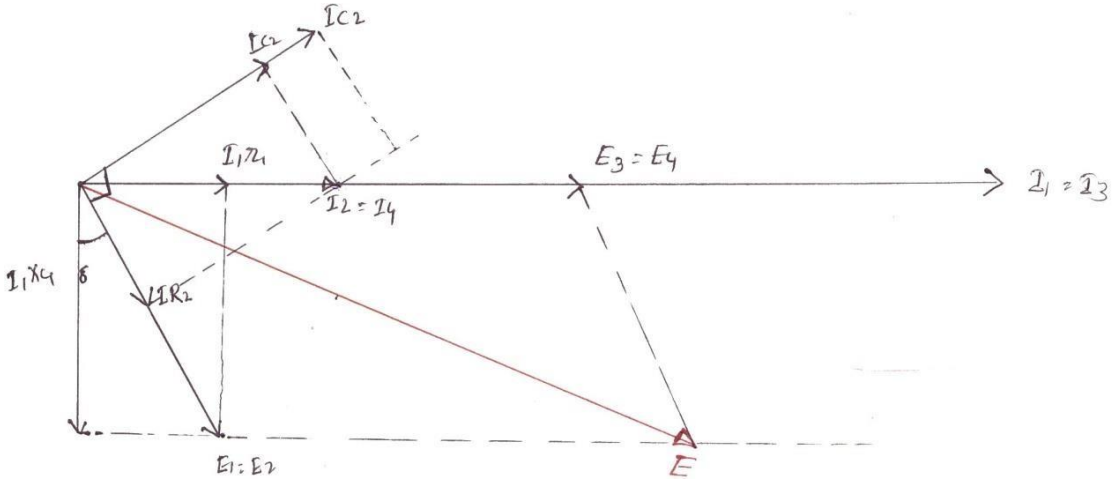

Fig 2.24 Phasor diagram of Wein's bridge

Comparing real term,

$$1 - w^2 C_1 C_2 r_1 R_2 = 0$$

$$w^2 C_1 C_2 r_1 R_2 = 1$$

$$w^2 = \frac{1}{C_1 C_2 r_1 R_2}$$

$$w = \frac{1}{\sqrt{C_1 C_2 r_1 R_2}}, f = \frac{1}{2\Pi\sqrt{C_1 C_2 r_1 R_2}}$$

NOTE

The above bridge can be used for measurements of capacitance. In such case, r_1 and C_1 are unknown and frequency is known. By equating real terms, we will get R_1 and C_1. Similarly by equating imaginary term, we will get another equation in terms of r_1 and C_1. It is only used for measurements of Audio frequency.

A.F=20 HZ to 20 KHZ

R.F=>> 20 KHZ

Comparing imaginary term,

$$wC_2R_2 + wC_1r_1 = wC_1\frac{R_2 R_3 R_4}{C_1R_2R_3}$$

$$C_2R_2 + C_1r_1 = \frac{R_4}{C_1R_2R_3} \quad \text{.....(2.19)}$$

$$C_2 = \frac{1}{w^2 C_1 r_1 R_2}$$

Substituting in eqn. (2.19), we have

$$C_2R_2 + \frac{r_1}{w^2 C_1 r_1 R_2} = \frac{R_2 R_3}{R_4} C_1$$

Multiplying $\frac{R_4}{R_2 R_3}$ in both sides, we have

$$C_2R_2 \times \frac{R_4}{R_2R_3} + \frac{1}{w^2 C_2 R_2} \times \frac{R_4}{R_2R_3} = C_1$$

$$C_1 = \frac{C_2 R_4}{R_3} + \frac{w^2 C_2 R_4 R_2}{R_3}$$

$$w^2 C_1 r_1 C_2 R_2 = 1$$

$$r_1 = \frac{1}{w^2 C_2 R_2 C_1} = \frac{1}{w C_2 R_2 \left[\frac{C_2 R_4}{R_3} + \frac{w^2 C_2 R_4 R_2}{R_3} \right]}$$

$$= \frac{1}{w^2 C_2^2 R_2 \left[\frac{R_4}{R_3} + \frac{R_4}{R_2 R_3} \right]}$$

$$r_1 = \frac{1}{w^2 C_2^2 R_2 \left[\frac{R_4}{R_3} + \frac{1}{R_2} \right]}$$

$$r_1 = \frac{1}{w^2 C_2^2 R_2 \left(\frac{R_3}{R_4} + \frac{1}{R_2} \right)}$$

High Voltage ScheringBridge

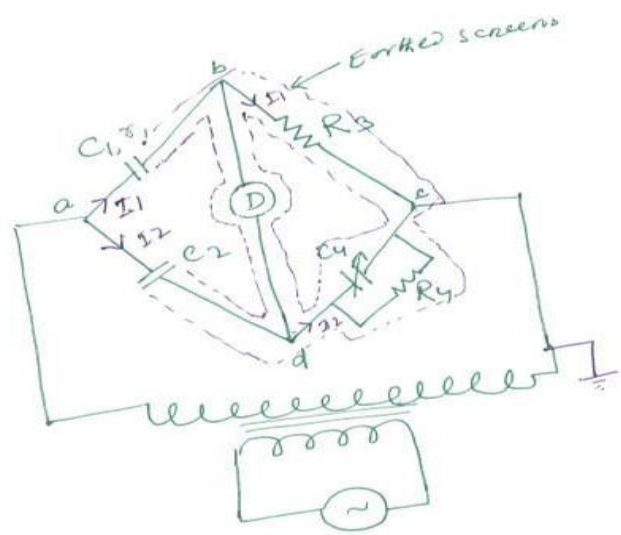

Fig 2.25 High Voltage Schering bridge

(1) The high voltage supply is obtained from a transformer usually at 50HZ.

Wagner earthingdevice:

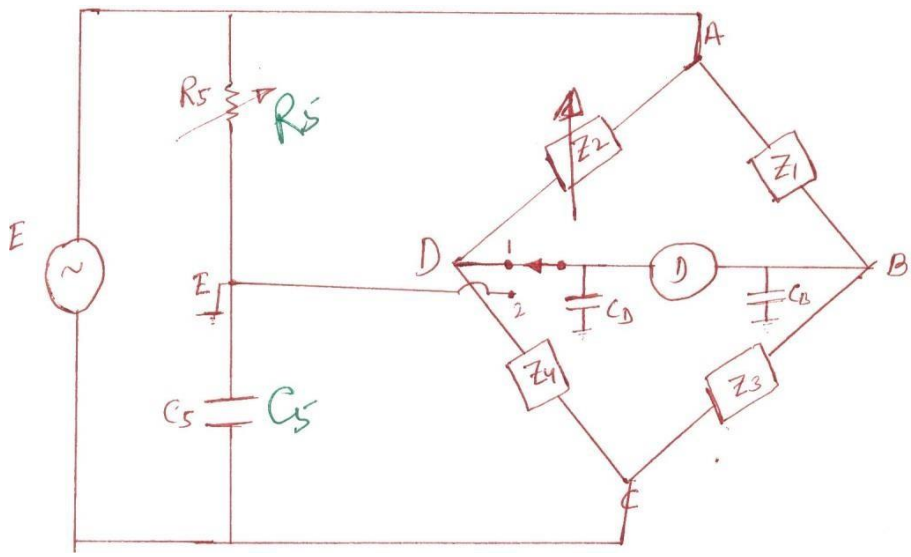

Fig 2.26 Wagner Earthing device

Wagner earthing consists of ‘R’ and ‘C’ in series. The stray capacitance at node ‘B’ and ‘D’ are C_B, C_D respectively. These Stray capacitances produced error in the measurements of ‘L’ and ‘C’. These error will predominant at high frequency. The error due to this capacitance can be eliminated using wagner earthingarm.

Close the change over switch to the position (1) and obtained balanced. Now change the switch to position (2) and obtained balance. This process has to repeat until balance is achieved in both the position. In this condition the potential difference across each capacitor is zero. Current drawn by this is zero. Therefore they do not have any effect on themeasurements.

What are the sources of error in the bridge measurements?

- ✓ Error due to stray capacitance andinductance.
- ✓ Due to externalfield.
- ✓ Leakage error: poor insulation between various parts of bridge can produced thiserror.
- ✓ Eddy currenterror.
- ✓ Frequencyerror.

- ✓ Waveform error (due toharmonics)
- ✓ Residual error: small inductance and small capacitance of the resistor produce thiserror.

Precaution

- ✓ The load inductance is eliminated by twisting the connecting the connectinglead.
- ✓ Inthe caseofcapacitive bridge,theconnectingleadarekept apart.($\because C=\frac{A\in 0\in r}{d}$)
- ✓ In the case of inductive bridge, the various arm are magneticallyscreen.
- ✓ In the case of capacitive bridge, the various arm are electro statically screen to reduced the stray capacitance between variousarm.
- ✓ To avoid the problem of spike, an inter bridge transformer is used in between the source andbridge.
- ✓ The stray capacitance between the ends of detector to the ground, cause difficulty in balancing as well as error in measurements. To avoid this problem, we use wagner earthingdevice.

Ballasticgalvanometer

This is a sophisticated instrument. This works on the principle of PMMC meter. The only difference is the type of suspension is used for this meter. Lamp and glass scale method is used to obtain the deflection. A small mirror is attached to the moving system. Phosphorous bronze wire is used forsuspension.

When the D.C. voltage is applied to the terminals of moving coil, current flows through it. When a current carrying coil kept in the magnetic field, produced by permanent magnet, it experiences a force. The coil deflects and mirror deflects. The light spot on the glass scale also move. This deflection is proportional to the current through thecoil.

$i=\frac{Q}{t}$, $Q=it=\int idt$

$\theta\propto Q$, deflection $\propto$Charge

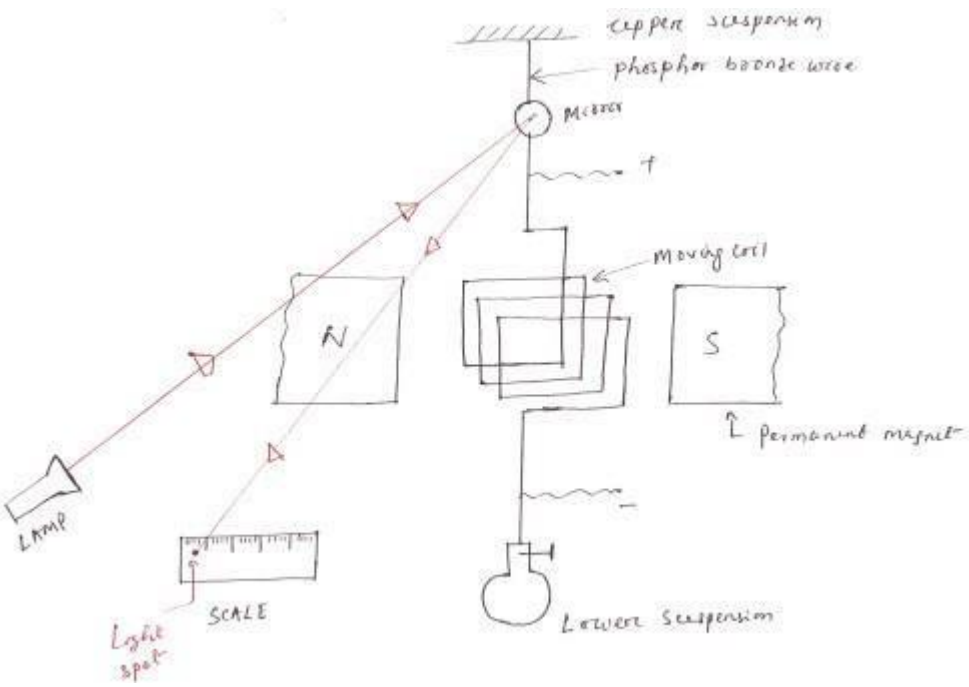

Fig 2.27 Ballastic galvanometer

Measurements of flux and flux density (Method ofreversal)

D.C. voltage is applied to the electromagnet through a variable resistance R_1 and a reversing switch. The voltage applied to the toroid can be reversed by changing the switch from position 2 to position '1'. Let the switch be in position '2' initially. A constant current flows through the toroid and a constant flux is established in the core of the magnet.

A search coil of few turns is provided on the toroid. The B.G. is connected to the search coil through a current limiting resistance. When it is required to measure the flux, the switch is changed from position '2' to position '1'. Hence the flux reduced to zero and it starts increasing in the reverse direction. The flux goes from + $\phi$to - ϕ, in time 't' second. An emf is inducedin thesearchcoil,sciencethefluxchangeswithtime.Thisemfcirculatesacurrentthrough$R_2$and B.G. The meter deflects. The switch is normally closed. It is opened when it is required to take the reading.

Plotting the BHcurve

The curve drawn with the current on the X-axis and the flux on the Y-axis, is called magnetization characteristics. The shape of B-H curve is similar to shape of magnetization characteristics. The residual magnetism present in the specimen can be removed as follows.

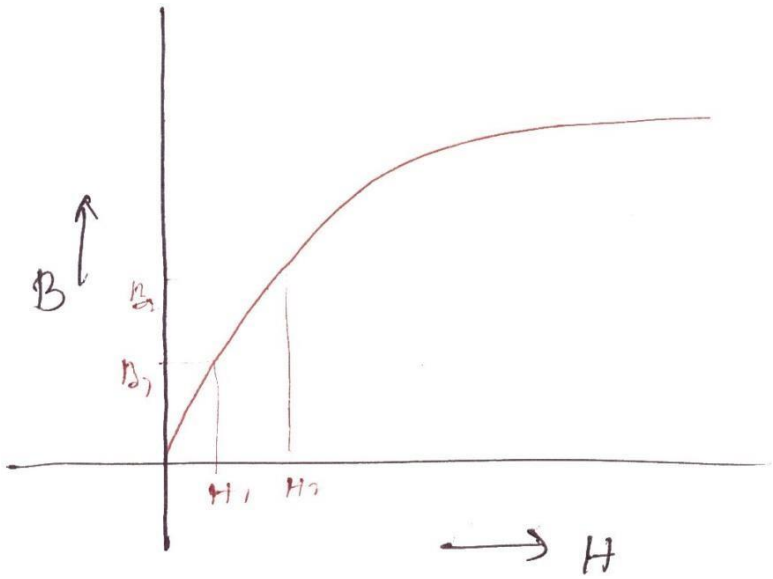

Fig 2.28 BH curve

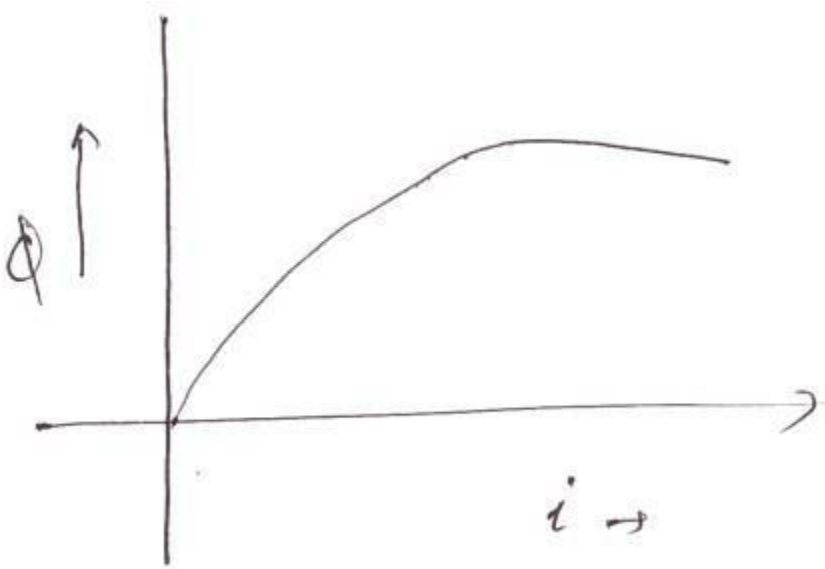

Fig 2.29 Magnetization characteristics

Close the switch ‘S_2’ to protect the galvanometer, from high current. Change the switch S1 from position ‘1’ to ‘2’ and vice versa for several times.

To start with the resistance ‘R_1’ is kept at maximum resistance position. For a particular value of current, the deflection of B.G. is noted. This process is repeated for various value of current. For each deflection flux can be calculated.($B = \frac{\phi}{A}$)

Magnetic field intensity value for various current can be calculated.().The B-H curve can be plotted by using the value of ‘B’ and ‘H’.

Measurements of iron loss:

Let R_P= pressure coil resistance R_S = resistance of coilS1

E= voltage reading= Voltage induced in S_2 I= current in the pressure coil

V_P= Voltage applied to wattmeter pressure coil. W= reading of wattmeter corresponding voltage V W_1= reading of wattmeter corresponding voltage E

$W \rightarrow V$ $\qquad \frac{W_1}{W} = \frac{E}{V} \Rightarrow W_1 = \frac{E \times W}{V}$

$W_1 \rightarrow E_P$

W1=Total loss=Iron loss+ Cupper loss.

The above circuit is similar to no load test of transformer.

In the case of no load test the reading of wattmeter is approximately equal to iron loss. Iron loss depends on the emf induced in the winding. Science emf is directly proportional to flux. The voltage applied to the pressure coil is V. The corresponding of wattmeter is ‘W’. The iron loss corresponding E is $E = \frac{WE}{V}$. The reading of the wattmeter includes the losses in the pressure coil and copper loss of the winding S1. These loses have to be subtracted to get the actual iron loss.

Galvanometers

D-Arsonval Galvanometer

Vibration Galvanometer Ballistic C

D-arsonval galvanometer (d.c.galvanometer)

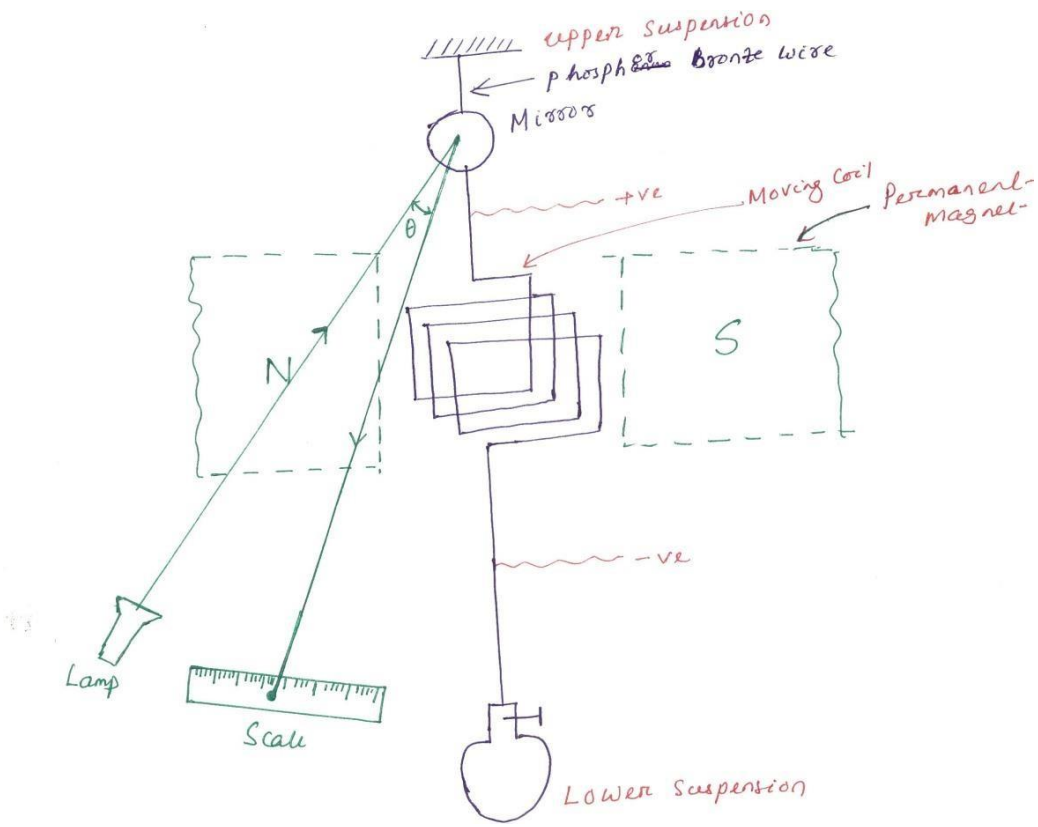

Fig 2.30 D-Arsonval Galvanometer

Galvanometer is a special type of ammeter used for measuring A or mA. This is a sophisticated instruments. This works on the principle of PMMC meter. The only difference is thetypeofsuspensionusedforthismeter.Itusesasophisticatedsuspensioncalledtaut suspension, so that moving system has negligible weight.

Lamp and glass scale method is used to obtain the deflection. A small mirror is attached to the moving system. Phosphors bronze is used forsuspension.

When D.C. voltage is applied to the terminal of moving coil, current flows through it. When current carrying coil is kept in the magnetic field produced by P.M. , it experiences a force. The light spot on the glass scale also move. This deflection is proportional to the current through the coil. This instrument can be used only with D.C. like PMMCmeter.

The deflecting Torque,

T_D=BINA

T_D=GI, Where G=BAN

$T_C=K_S\theta=S\theta$

At balance, $T_C=T_D \Rightarrow S\theta=GI$

$$\therefore \theta=\frac{GI}{S}$$

Where G= Displacements constant of Galvanometer

S=Spring constant

Vibration Galvanometer (A.C. Galvanometer)

The construction of this galvanometer is similar to the PMMC instrument except for the moving system. The moving coil is suspended using two ivory bridge pieces. The tension of the system can be varied by rotating the screw provided at the top suspension. The natural frequency can be varied by varying the tension wire ofthe screw or varying the distance between ivory bridge piece.

When A.C. current is passed through coil an alternating torque or vibration is produced. This vibration is maximum if the natural frequency of moving system coincide with supply frequency. Vibration is maximum, science resonance takes place. When the coil is vibrating , the mirror oscillates and the dot moves back and front. This appears as a line on the glass scale. Vibration galvanometer is used for null deflection of a dot appears on the scale. If the bridge is unbalanced, a line appears on the scale

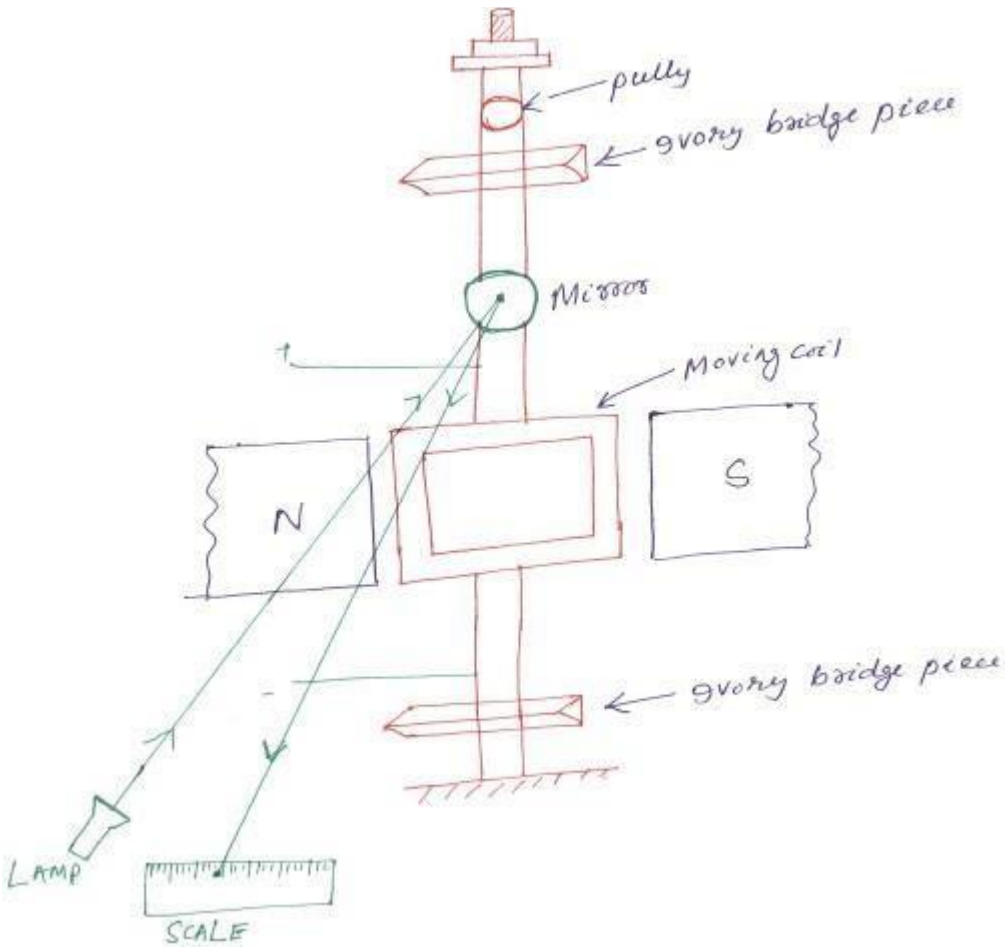

Fig 2.31 Vibration Galvanometer

Example 2.2-In a low- Voltage Schering bridge designed for the measurement of permittivity, the branch 'ab' consists of two electrodes between which the specimen under test may be inserted, arm 'bc' is a non-reactive resistor R_3 in parallel with a standard capacitor C_3, arm CD is a non-reactive resistor R_4 in parallel with a standard capacitor C_4, arm 'da' is a standard air capacitor of capacitance C_2. Without the specimen between the electrode, balance is obtained with following values , $C_3=C_4=120$ pF, $C_2=150$ pF, $R_3=R_4=5000\Omega$.With the specimen inserted, these values become $C_3=200$ pF,$C_4=1000$ pF,$C_2=900$ pF and $R_3=R_4=5000\Omega$. In such test w=5000 rad/sec. Find the relative permittivity of thespecimen?

Sol: Relative permittivity(ε_r) = $\frac{\text{capacitance measured with given medium}}{\text{capacitance measured with air medium}}$

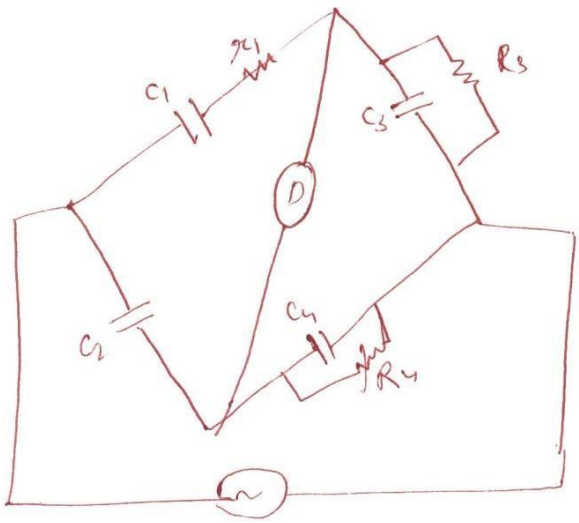

Fig 2.32 Schering bridge

$$C_1 = C_2 \left(\frac{R_4}{R_3}\right)$$

Let capacitance value C_0, when without specimen dielectric. Let the capacitance value C_S when with the specimendielectric.

$$C_0 = C_2\left(\frac{R_4}{R_3}\right) = 150 \times \frac{5000}{5000} = 150\ pF$$

$$C_S = C_2\left(\frac{R_4}{R_3}\right) = 900 \times \frac{5000}{5000} = 900\ pF$$

$$\varepsilon_r = \frac{C_S}{C_0} = \frac{900}{150} = 6$$

Example 2.3- A specimen of iron stamping weighting 10 kg and having a area of 16.8 cm^2 is tested by an episten square. Each of the two winding S_1 and S_2 have 515 turns. A.C. voltage of 50 HZ frequency is given to the primary. The current in the primary is 0.35 A. A voltmeter connected to S_2 indicates 250 V. Resistance of S_1 and S_2 each equal to 40 Ω. Resistance of pressure coil is 80 kΩ. Calculate maximum flux density in the specimen and iron loss/kg if the wattmeter indicates 80 watt?

Sol^n- $E = 4.44\, f\phi_m N$

$$B_m = \frac{E}{4.44fAN} = 1.3 wb/m^2$$

$$\text{Iron loss} = W\left(1 + \frac{R_S}{R_P}\right) - \frac{E^2}{(R_S + R_P)}$$

$$= 80\left(1 + \frac{40}{80 \times 10^3}\right) - \frac{250^2}{(40 + 80 \times 10^3)} = 79.26 watt$$

Iron loss/ kg=79.26/10=7.926 w/kg.

UNIT – IV

POTENTIOMETERS, INSTRUMENT TRANSFORMER & ELECTRONIC MEASUREMENTS:

Working Principle of Potentiometer

This is a very basic instrument used for comparing emf two cells and for calibrating ammeter, voltmeter and watt-meter. The basic **working principle of potentiometer** is very very simple. Suppose we have connected two battery in head to head and tale to tale through a galvanometer. That means the positive terminals of both battery are connected together and negative terminals are also connected together through a galvanometer as shown in the figure below

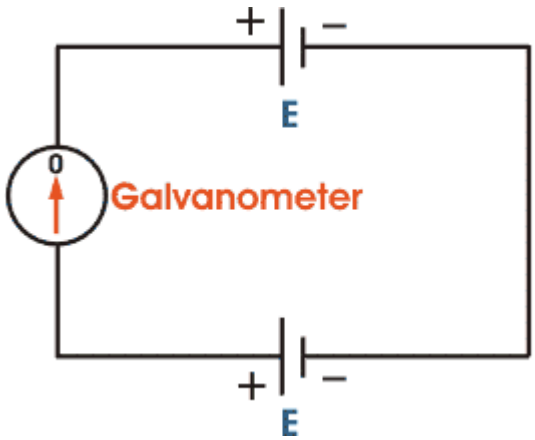

.

it is clear that if the voltageof both battery cells is exactly equal, there will be no circulating currentin the circuit and hence the galvanometer shows null deflection. The **working principle of potentiometer** depends upon this phenomenon.

Now let's think about another circuit, where a battery is connected across a resistor via a switch and a rheostat as shown in the figure below voltage-drop-calculation/ across the resistor. As there is a voltage drop across the resistor, this portion of the circuit can be considered as a voltagesource for other external circuits. That means anything connected across the resistor will get voltage. If the resistor has uniform cross section throughout its length, the electrical resistance per unit length of the resistor is also uniform throughout itslength.

voltage drop per unit length of the resistor is also uniform. Suppose the current through the resistor is i A and resistance per unit length of the resistor is r Ω. Then the voltage appears per unit length across the resistor would be 'ir' ans say it is v volt.

positive terminal of a standard cell is connected to point A on the sliding resistor and negative terminal of the same is connected with a galvanometer. Other end of the galvanometer is in contact with the resistorvia a sliding contact as shown in the figure above. By adjusting this

sliding end, a point like B is found where, there is no current through the galvanometer, hence no deflection of galvanometer.

That means emf of the standard cell is just balanced by the voltage-drop-calculation/ appears across AB. Now if the distance between point A and B is L, then it can be written emf of standard cell E = Lv volt. As v (voltage drop per unit length of the sliding resistor) is known and L is measured from the scale attached to the resistor, the value of E i.e. emf of standard cell can also be calculated from the above simple equation very easily.

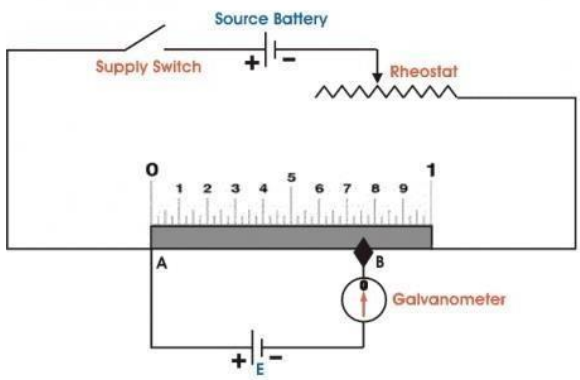

DC POTENTIOMETER CAN COMPARE EMFS OF TWO DIFFERENT CELLS

Two cells whose emf's are to be compared are joined as shown in the figure below. The positive terminals of the cells and source battery are joined together. The negative terminals of the cells are joined with the galvanometer in turn through a two way switch. The other end of the galvanometer is connected to a sliding contact on the resistor. Now by adjusting sliding contact on the resistor, it is found that the null deflection of galvanometer comes for first cell at a length of L on the scale and after positioning to way switch to second cell and then by adjusting the sliding contact, it is found that the null deflection of galvanometer comes for that cell at a length of L_1 on the scale.Let's think of the first cell as standard cell and it's emf is E and second cell is unknown cell whose emf is E_1. Now as per above explanation, E = Lv volt and $L_1 = L_1v$ volt Dividing one equation by other, we get

$$\frac{E_1}{E} = \frac{L_1}{L}$$

As the emf of the standard cell is known, hence emf of the unknown cell can easily be determined.

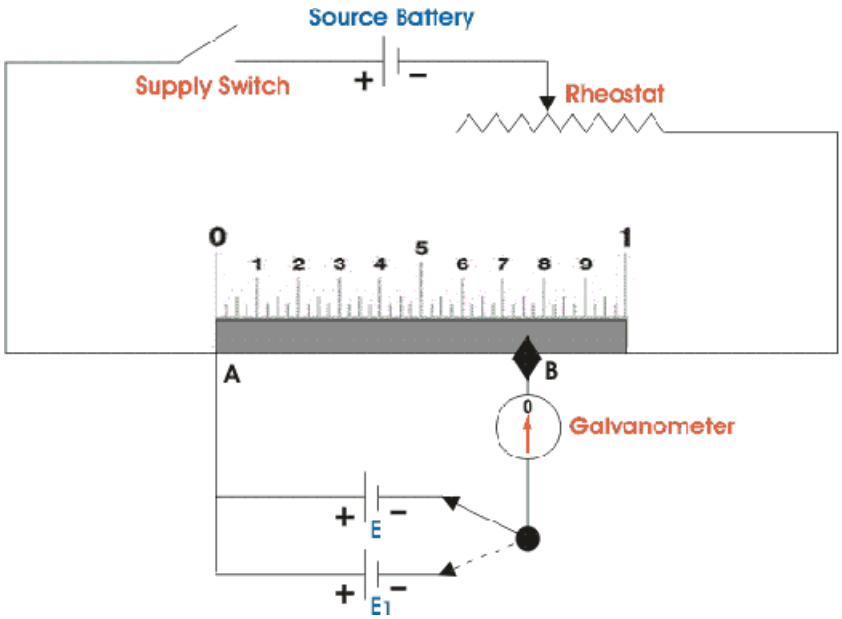

AC Potentiometer

The Potentiometer is an instrument which measures unknown voltage by balancing it with a known voltage. The known source may be DC or AC. The working phenomenon of DC potentiometer and **AC potentiometer** is same. But there is one major difference between their measurements, DC potentiometer only measures the magnitude of the unknown voltage. Where as, AC potentiometer measures both the magnitude and phase of unknown voltage by comparing it with known reference. There are two types of AC potentiometers:

1. Polar typepotentiometer.
2. Coordinate typepotentiometer.

Polar type Potentiometer

In such type of instruments, two separate scales are used to measure magnitude and phase angle on some reference of the unknown e.m.f. There is a provision on the scale that it could read phase angle up to 3600. It has electrodynamometer type ammeter along with DC potentiometer and phase-shifting transformer which is operated by single phase supply. In phase-shifting transformer, there is a combination of two ring-shaped laminated steel stators connected perpendicularly to each other as shown in the figure. One is directly connected to power supply and the other one is connected in series with variable resistance and capacitor. The function of the series components is to maintain constant AC supply in the potentiometer by doing small adjustments init.

Between the stators, there is laminated rotor having slots and winding which supplies voltage to

the slide-wire circuit of the Potentiometer. When currentstart flowing from stators, the rotating field is developed around the rotor and due to it e.m.f. is induced in the rotor winding. The phase displacement of the rotor emf is equal to rotor movement angle from its original position and it is related to stator supply voltage. The whole arrangement of winding are done in such a way that the magnitude of the induced emf in the rotor may change but it does not affect the phase angle and it can be read on the scale fixed on the top of the instrument.

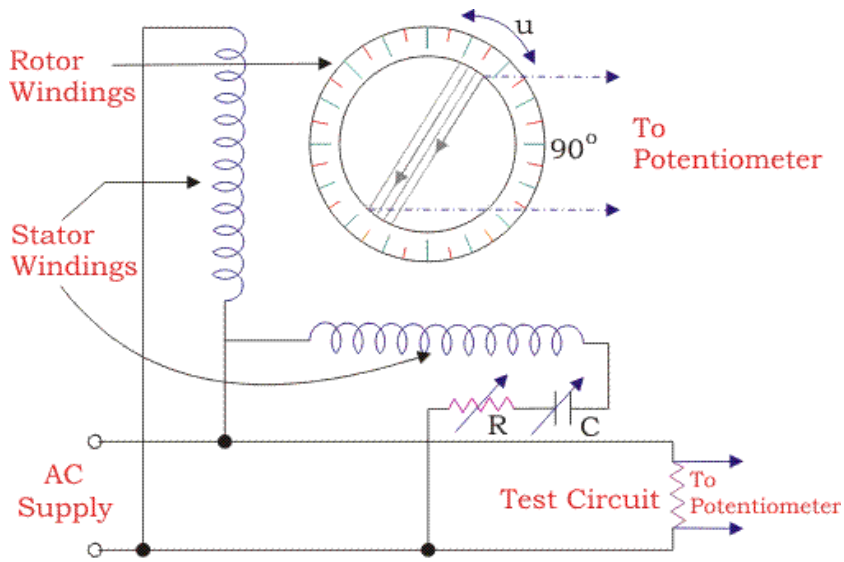

Polar Type Potentiometer

The induced emf in rotor winding by stator winding 1 can be expressed as

$$E_1 = K\ I\ sin\omega t\ cos\ \varnothing\ .....(1)$$

The induced emf in the rotor winding by the stator winding 2,

$$E_2 = K\ I\ sin(\omega t + 90^o)\ cos(\varnothing + 90^o)$$
$$= -K\ I\ cos\omega t\ sin\varnothing\ .....(2)$$

From equation (1) and (2), we get

$$E = K\ I\ (sin\omega t\ cos\varnothing - cos\omega t\ sin\varnothing)$$

Therefore, resultant induced emf in the rotor winding due to two stator winding $E = K\ Isin\ (\omega t - \varnothing)$Where, Ø gives the phaseangle.

COORDINATE TYPE POTENTIOMETER

In **coordinate AC potentiometer**, two separate potentiometers are caged in one circuit as shown in the figure. The first one is named as the in-phase potentiometer which is used to measure the in-phase factor of an unknown e.m.f. and the other one is named as quadrature potentiometer which measures quadrature part of the unknown e.m.f. the sliding contact AA' in the in-phase potentiometer and BB' in quadrature potentiometer are used for obtaining the desired current in the circuit. By adjusting rheostat R and R' and sliding contacts, the current in the quadrature potentiometer becomes equal to the current in the in-phase potentiometer and a variable galvanometer shows the null value. S_1 and S_2 are signs changing switches which are used to change the polarity of the test voltage if it is required for balancing the Potentiometer. There are two step-down transformers T_1 and T_2 which isolate potentiometer from the line and give an earthed screens protection between the winding. It also supplies 6 volts to potentiometers. Now to measure unknown e.m.f. its terminals are connected across sliding contacts AA' using selector switch S_3. By doing some adjustments in sliding contacts and rheostat, the whole circuit gets balanced and galvanometer reads zero at the balanced condition. Now the in-phase component V_A of the unknown e.m.f.is obtained from the in-phase potentiometer and quadrature component V_B is obtained from quadraturepotentiometer.

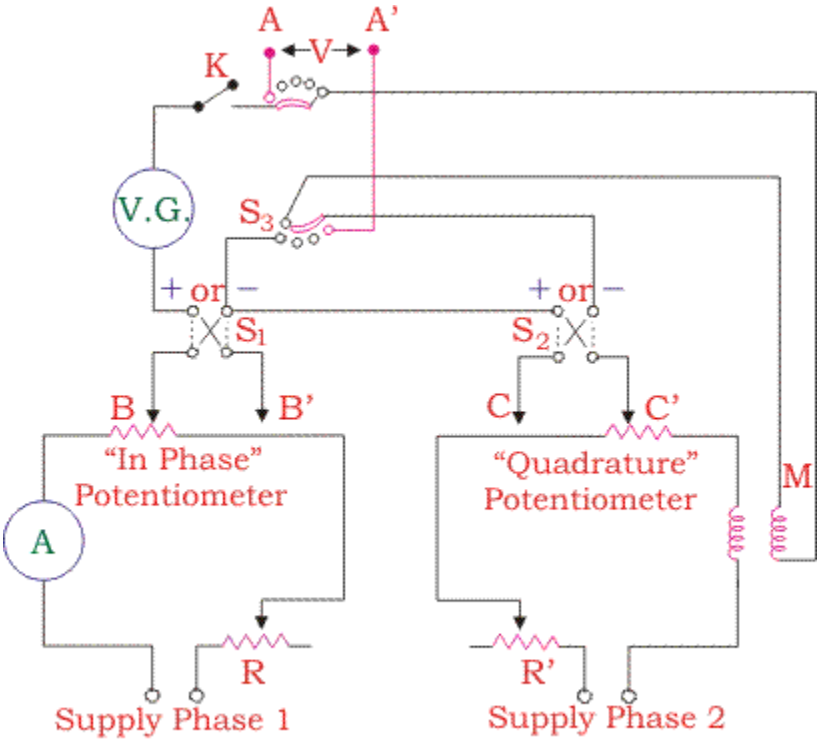

Coordinate AC potentiometer

$$V = (V_A^2 + V_B^2)^{1/2}$$

Thus, the resultant voltage of the coordinate

ACpotentiometeris

And the phase angle is givenby $\varnothing = tan^{-1}(V_B/V_A)$

Applications of AC Potentiometer

1. Measurement of self-inductance.
2. Calibration ofvoltmeter.
3. Calibration ofAmmeter.
4. Calibration of wattmeter.

INSTRUMENT TRANSFORMERS

Introduction of Instrument Transformers

Instrument Transformers are used in AC system for measurement of electrical quantities i.e. voltage,current, power, energy, power factor, frequency. Instrument transformers are also used with protective relays for protection of power system. Basic function of Instrument transformers is to step down the AC System voltage and current. The voltage and current level of power system is very high. It is very difficult and costly to design the measuring instruments for measurement of such high level voltage and current. Generally measuring instruments are designed for 5 A and 110 V.

The measurement of such very large electrical quantities, can be made possible by using the Instrument transformers

Advantages of Instrument Transformers

1. The large voltage and current of AC Power system can be measured by using small rating measuring instrument i.e. 5 A, 110 – 120V.
2. By using the instrument transformers, measuring instruments can be standardized. Which results in reduction of cost of measuring instruments. More ever the damaged measuring instruments can be replaced easy with healthy standardized measuring instruments.
3. Instrument transformers provide electrical isolation between high voltage power circuit and measuring instruments. Which reduces the electrical insulation requirement for measuring instruments and protective circuits and also assures the safety ofoperators.

4 Several measuring instruments can be connected through a single transformer to power system.

4 Due to low voltage and current level in measuring and protective circuit, there is low power consumption in measuring and protectivecircuits.

Types of Instrument Transformers

Instrument transformers are of two types –

1. Current Transformer(C.T.)
2. Potential Transformer(P.T.)

Current Transformer (C.T.)

Current transformeris used to step down the current of power system to a lower level to make it feasible to be measured by small rating Ammeter (i.e. 5A ammeter). A typical connection diagram of a current transformer is shown in figure below.

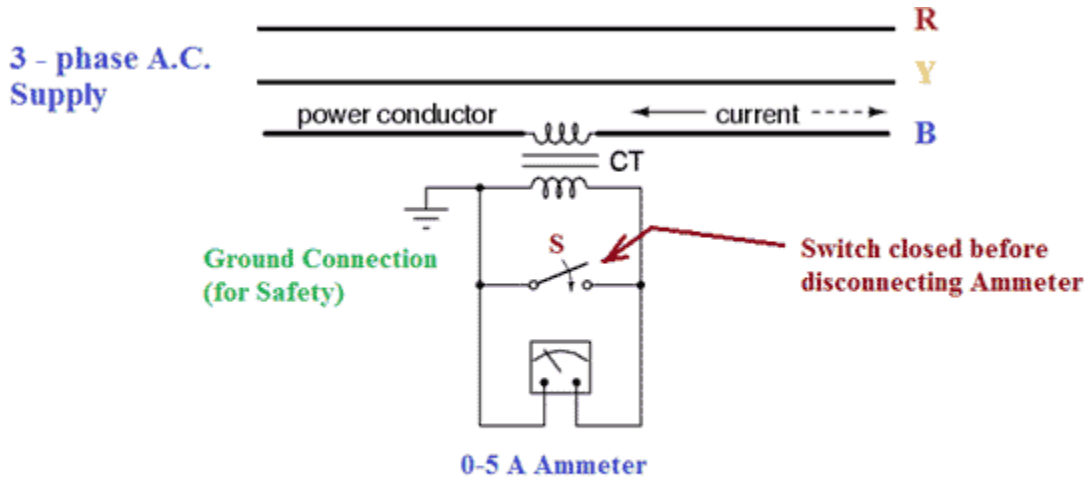

Current Transformer (C.T.)

Primary of C.T. is having very few turns. Sometimes bar primary is also used. Primary is connected in series with the power circuit. Therefore, sometimes it also called series transformer**.**

The secondary is having large no. of turns. Secondary is connected directly to an ammeter. As the ammeter is having very small resistance. Hence, the secondary of current transformer operates almost in short circuited condition. One terminal of secondary is earthed to avoid the large voltage on secondary with respect to earth. Which in turns reduce the chances of insulation breakdown and also protect the operator against high voltage. More ever before disconnecting the ammeter, secondary is short circuited through a switch 'S' as shown in figure above to avoid the high voltage build up across thesecondary.

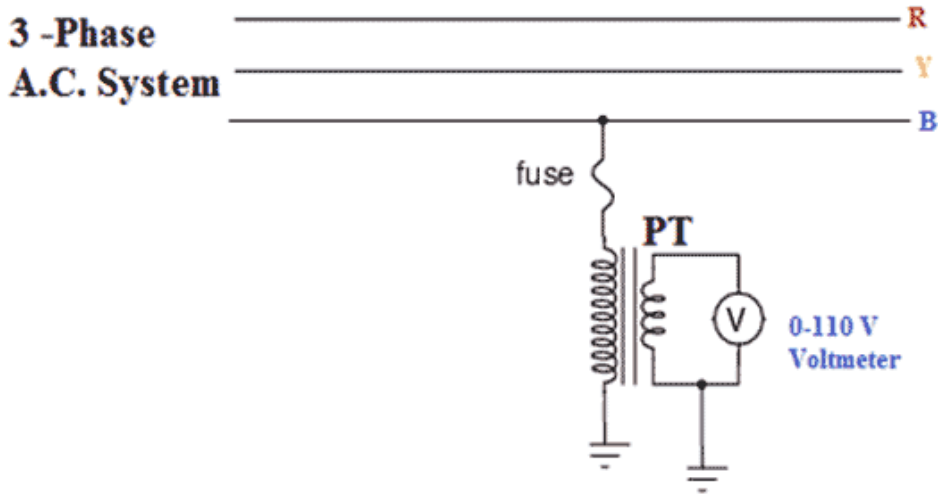

Potential Transformer (P.T.)

Sl. No.	Current Transformer (C.T.)	Potential Transformer (P.T.)
1	Connected in series with power circuit.	Connected in Parallel with Power circuit.
2	Secondary is connected to Ammeter.	Secondary is connected to Voltmeter.
3	Secondary works almost in short circuited condition.	Secondary works almost in open circuited condition.
4	Primary current depends on power circuit current.	Primary current depends on secondary burden.
5	Primary current and excitation vary over wide range with change of power circuit current	Primary current and excitation variation are restricted to a small range.
6	One terminal of secondary is earthed to avoid the insulation break down.	One terminal of secondary can be earthed for Safety.
7	Secondary is never be open circuited.	Secondary can be used in open circuit condition.

Error in PT or Potential Transformer or VT or Voltage Transforme

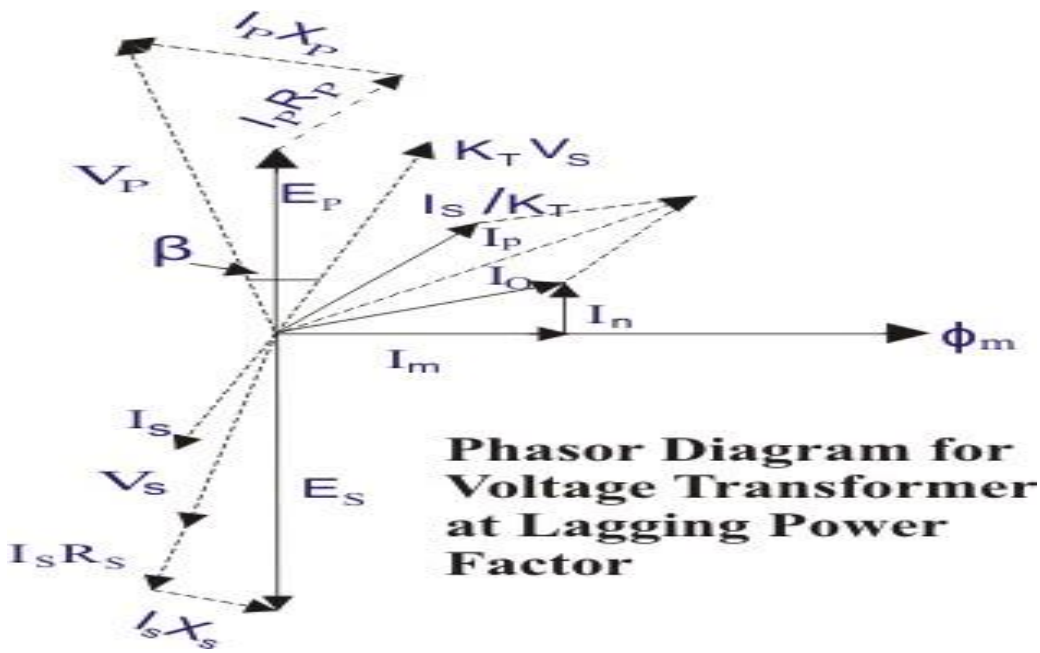

I_s - Secondary current.

Es - Secondary induced emf.

Vs - Secondary terminal voltage

. Rs - Secondary winding resistance.

Xs - Secondary winding reactance. Ip - Primary current.

Ep - Primary induced emf.

Vp - Primary terminal voltage.

Rp - Primary winding resistance.

Xp - Primary winding reactance.

K_T - Turns ratio = Numbers of primary turns/number of secondary turns.

I_0 - Excitation current.

Im - Magnetizing component of I0.

Iw - Core loss component of I0.

Φm - Main flux.

β - Phase angle error.

As in the case of current transformer and other purpose electrical power transformer, total primary current I_p is the vector sum of excitation current and the current equal to reversal of secondary current multiplied by the ratio $1/K_T$.

$$Hence,\ I_p = \frac{I_0 + I_s}{K_T}$$

If V_p is the system voltage applied to the primary of the PT, then voltage drops due to resistance and reactance of primary winding due to primary current I_p will come into picture. After subtracting this voltage drop from V_p, E_p will appear across the primary terminals. This E_p is equal to primary induced emf. This primary emf will transform to the secondary winding by mutual inductionand transformed emf is E_s. Again this E_s will be dropped by secondary winding resistance and reactance, and resultant will actually appear across the burden terminals and it is denoted as V_s. So, if system voltageis V_p, ideally V_p/K_T should be the secondary voltage of PT, but in reality; actual secondary voltage of PT is V_s.

Voltage Error or Ratio Error in Potential Transformer (PT) or Voltage Transformer (VT)

The difference between the ideal value V_p/K_T and actual value V_s is the voltage error or ratio error in a potential transformer, it can be expressed as,

$$\% \text{ voltage error} = \frac{V_p - K_T.V_s}{V_p} \times 100\ \%$$

Phase Error or Phase Angle Error in Potential or Voltage Transformer

The angle 'β' between the primary system voltage V_p and the reversed secondary voltage vectors $K_T.V_s$ is the phase error.

Cause of Error in Potential Transformer

The voltage applied to the primary of the potential transformer first drops due to the internal impedance of the primary. Then it appears across the primary winding and then transformed proportionally to its turns ratio, to the secondary winding. This transformed voltage across the secondary winding will again drop due to the internal impedance of the secondary, before appearing across burden terminals. This is the reason of errors in **potential transformer**.

Ratio Error Phase Angle Error in CurrentTransformer

Definition of InstrumentTransformer

Instrument transformers means **current transformer** and voltage transformer are used in electrical powersystem for stepping down currents and voltages of the system for metering and protection purpose.

Current Transformer(CT)

A CT is an instrument transformer in which the secondary current is substantially proportional to primary current and differs in phase from it by ideally zero degree.

Error in Current Transformer or CT

But in an actual CT, errors with which we are connected can best be considered through a study

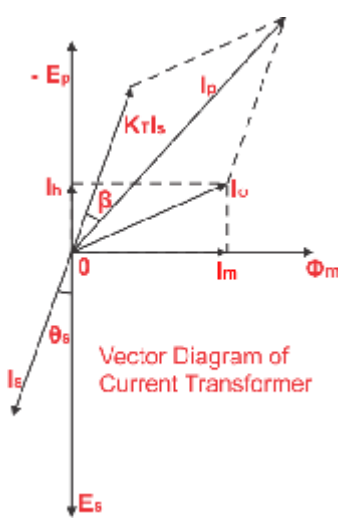

of phasor diagram for a CT

, Is - Secondary current

Es - Secondary induced emf.

Ip - Primary current.

Ep - Primary induced emf.

KT - Turns ratio = Numbers of secondary turns/number of primary turns.

I0 - Excitation current.

Im - Magnetizing component of I0.

Iw - Core loss component of I0.

Φm - Main flux. Let us take flux as reference.

EMF E_s and E_p lags behind the flux by 90°. The magnitude of the passers E_s and E_p are proportional to secondary and primary turns. The excitation current I_o which is made up of two components I_m and I_w. The secondary current I_0 lags behind the secondary induced emf E_s by an angle Φ_s. The secondary current is now transferred to the primary side by reversing I_s and multiplied by the turns ratio K_T. The total current flows through the primary I_p is then vector sum of $K_T I_s$ and I_0.

The Current Error or Ratio Error in Current Transformer or CT

From above passer diagram it is clear that primary current I_p is not exactly equal to the secondary current multiplied by turns ratio, i.e. $K_T I_s$. This difference is due to the primary current is contributed by the core excitation current. The error in current transformer introduced due to this difference is called current error of CT or some times ratio error in current transformer**.**

$$\text{Hence, the percentage current error} = \frac{|I_p| - |K_T.I_s|}{I_p} \times 100\ \%$$

Phase Error or Phase Angle Error in Current Transformer

For a ideal CT the angle between the primary and reversed secondary current vector is zero. But for an actual CT there is always a difference in phase between two due to the fact that primary current has to supply the component of the exiting current. The angle between the above two phases in termed as phase angle error in current transformer or CT. Here in the pharos diagram it is β the phase angle error is usually expressed in minutes.

Cause of Error in Current Transformer

The total primary current is not actually transformed in CT. One part of the primary current is consumed for core excitation and remaining is actually transformerswith turns ratioof CT so there is **error in current transformer** means

there are both **ratio error in current transformer** as well as a **phase angle error in current transformer**.

How to Reduce Error in CurrentTransformer

It is desirable to reduce these errors, for better performance. For achieving minimum error in current transformer, one can follow thefollowing,

1. Using a core of high permeability and low hysteresis loss magneticmaterials.
2. Keeping the rated burden to the nearer value of the actualburden.
3. Ensuring minimum length of flux path and increasing cross-sectional area of the core, minimizing joint of thecore.
4. Lowering the secondary internalimpedance.

UNIT – V

TRANSDUCERS

Transducers

Definition of transducers – Classification of transducers – Advantages of Electrical transducers – Characteristics and choice of transducers – Principle operation of resistor, inductor, LVDT and capacitor transducers – LVDT Applications – Strain gauge and its principle of operation – Guage factor – Thermistors – Thermocouples – Synchros – Piezo electric transducers – Photo diodes.

INTODUCTION

A device which converts a physical quantity into the proportional electrical signal is called a transducer. The electrical signal produced may be a voltage, current or frequency. A transducer uses many effects to produce such conversion. The process of transforming signal from one form to other is called transduction. A transducer is also called pick up. The transduction element transforms the output of the sensor to an electrical output, as shown in theFig.

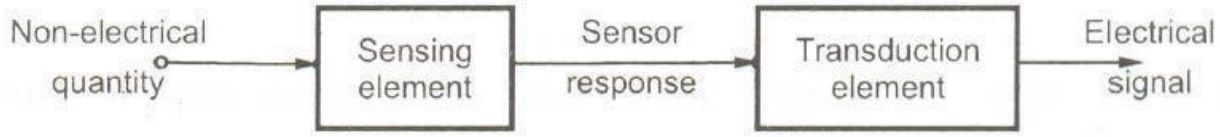

A transducer will have basically two main components. They are

1. SensingElement

The physical quantity or its rate of change is sensed and responded to by this part of the transistor.

2. TransductionElement

The output of the sensing element is passed on to the transduction element. This element is responsible for converting the non-electrical signal into its proportional electricalsignal.

There may be cases when the transduction element performs the action of both transduction and sensing. The best example of such a transducer is a thermocouple. A thermocouple is used to generate a voltage corresponding to the heat that is generated at the junction of two dissimilar metals.

Classification of Transducers

The Classification of Transducers is done in many ways. Some of the criteria for the classification are based on their area of application, Method of energy conversion, Nature of output signal, According to Electrical principles involved, Electrical parameter used, principle of operation, &

Typical applications.
The transducers can be classified broadly
i. On the basis of transduction formused
ii. As primary and secondarytransducers
iii. As active and passivetransducers
iv. As transducers and inversetransducers.
Broadly one such generalization is concerned with energy considerations wherein they are classified as active & Passive transducers. A component whose output energy is supplied entirely by its input signal (physical quantity under measurement) is commonly called a „passive transducer‟. In other words the passive transducers derive the power required for transduction from an auxiliary source. Active transducers are those which do not require an auxiliary power source to produce their output. They are

also known as self generating type since they produce their own voltage or current output. Some of the passive transducers (electrical transducers), their electrical parameter (resistance, capacitance, etc), principle of operation and applications are listed below.

Resistive Transducers

1. Resistance Strain Gauge – The change in value of resistance of metal semi-conductor due to elongation or compression is known by the measurement of torque, displacement orforce.
2. Resistance Thermometer – The change in resistance of metal wire due to the change in temperature known by the measurement oftemperature.
3. Resistance Hygrometer – The change in the resistance of conductive strip due to the change of moisture content is known by the value of its correspondinghumidity.
4. Hot Wire Meter – The change in resistance of a heating element due to convection cooling of a flow of gas is known by its corresponding gas flow orpressure.
5. Photoconductive Cell – The change in resistance of a cell due to a corresponding change in light flux is known by its corresponding lightintensity.
6. Thermistor – The change in resistance of a semi-conductor that has a negative co-efficient of resistance is known by its corresponding measure oftemperature.
7. Potentiometer Type – The change in resistance of a potentiometer reading due to the movement of the slider as a part of an external force applied is known by its corresponding pressure or displacement.

Capacitance Transducers

1. Variable capacitance pressure gage-
Principle of operation: Distance between two parallel plates is varied by an externally applied force Applications: Measurement of Displacement, pressure
2. Capacitormicrophone
Principle of operation: Sound pressure varies the capacitance between a fixed plate and a movable diaphragm. Applications: Speech, music, noise
3. Dielectricgauge
Principle of operation: Variation in capacitance by changes in the dielectric. Applications: Liquid level, thickness

Inductance Transducers

1. Magnetic circuit transducer
Principle of operation: Self inductance or mutual inductance of ac-excited coil is varied by changes in the magnetic circuit. Applications: Pressure, displacement

2. Reluctancepickup
   Principle of operation: Reluctance of the magnetic circuit is varied by changing the position of the iron core of a coil. Applications: Pressure, displacement, vibration, position
3. Differential transformer
   Principle of operation: The differential voltage of two secondary windings of a transformer is varied by positioning the magnetic core through an externally applied force. Applications: Pressure, force, displacement, position
4. Eddy currentgage
   Principle of operation: Inductance of a coil is varied by the proximity of an eddy current plate. Applications: Displacement, thickness
5. Magnetostrictiongauge
   Principle of operation: Magnetic properties are varied by pressure and stress. Applications: Force, pressure, sound

Voltage and currentTransducers

1. Hall effectpickup
   Principle of operation: A potential difference is generated across a semiconductor plate (germanium) when magnetic flux interacts with an applied current. Applications: Magnetic flux, current
2. Ionizationchamber
   Principle of operation: Electron flow induced by ionization of gas due to radioactive radiation. Applications: Particle counting, radiation
3. Photoemissivecell
   Principle of operation: Electron emission due to incident radiation on photoemissive surface. Applications: Light and radiation
4. Photomultipliertube
   Principle of operation: Secondary electron emission due to incident radiation on photosensitive cathode. Applications: Light and radiation, photo-sensitive relays

Self-Generating Transducers (No External Power) – Active Transducers

They do not require an external power, and produce an analog voltage or current when stimulated by some physical form ofenergy.

1. Thermocouple andthermopile
   Principle of operation: An emf is generated across the junction of two dissimilar metals or semiconductors when that junction is heated. Applications: Temperature, heat flow, radiation.
2. Moving-coil generator
   Principle of operation: Motion of a coil in a magnetic field generates a voltage. Applications: Velocity. Vibration
3. Piezoelectricpickup
   An emf is generated when an external force is applied to certain crystalline materials, such as quartz Sound, vibration. acceleration, pressure changes
4. Photovoltaiccell
   Principle of operation: A voltage is generated in a semi-conductor junction device when

radiant energy stimulates the cell Applications: Light meter, solar cell

Primary Transducers and Secondary Transducers- Bourden tube acting as a primary detecter senses the pressure and converts the pressure into a displacement of its free end.The displacement of the free end moves the core of a linear variable differential transformer(LVDT) which produces an output voltage.

Analog Transducers-These transducers convert the input quantity into an analog output which is a continuous function of time. ◦ Strain Gauge ◦ LVDT ◦ Thermocouple ◦ Thermistor

Digital Transducers-These transducers convert the input quantity into an electrical output which is in the form of pulses. ◦ Glass Scale can be read optically by means of a light source,an optical system and photocells

Transducers and Inverse Transducers- -A Transducer can be broadly defined as a device which converts a non-electrical quantity into an electrical quantity. Ex:-Resistive,inductive and capacitive transducers -An inverse transducer is defined as a device which converts an electrical quantity into a non-electrical quantity. Ex:-Piezoelectric crystals

Advantages of Electrical transducers

Mostly quantities to be measured are non-electrical such as temperature, pressure, displacement, humidity, fluid flow, speed etc., but these quantities cannot be measured directly. Hence such quantities are required to be sensed and changed into some other form for easy measurement. Electrical quantities such as current, voltage, resistance, inductance and capacitance etc. can be conveniently measured, transferred and stored, and, therefore, for measurement of the non-electrical quantities these are to be converted into electrical quantities first and ten measured. The function of converting non-electrical quantity into electrical one is accomplished by a device called the electricaltransducer.

Basically an electrical transducer is a sensing device by which a physical, mechanical or optical quantity to be measured is transformed directly, with a suitable mechanism, into an electrical signal (current, voltage and frequency). The production of these signals is based upon electrical effects which may be resistive, inductive, capacitive etc. in nature. The input versus output energy relationship takes a definite reproducible function. The output to input and the output to time behavior is predictable to a known degree of accuracy, sensitivity and response, within the specified environmental conditions. Electrical transducers have numerous advantages. Modern digital computers have made use of electrical transducers absolutely essential.

Electrical transducers suffer due to some draw-backs too, such as low reliability in comparison to that of mechanical transducers due to the ageing and drift of the active components and comparative high cost of electrical transducers and associated signal conditioners. In some cases the accuracy and resolution attainable are not as high as in mechanical transducers.

Some of the advantages are:

1. Electrical amplification and attenuation can be done easily and that to with a staticdevice.
2. The effect of friction isminimized.
3. The electric or electronic system can be controlled with a very small electricpower.
4. The electric power can be easily used, transmitted and process for the purpose ofmeasurement.

Factor to be considered while selecting transducer:

It should have high input impedance and low output impedance, to avoid loading effect. It should have good resolution over is entire selected range.
It must be highly sensitive to desired signal and insensitive to unwanted signal. Preferably small in size.
It should be able to work n corrosive environment.
It should be able to withstand pressure, shocks, vibrations etc.. It must have high degree of accuracy and repeatability.
Selected transducer must be free from errors.
The transducer circuit should have overload protection so that it will withstand overloads.

Requirements of a good transducers

- Smaller in size and weight.
- Highsensitivity.

- Ability to withstand environmentalconditions.
- Lowcost.

RESISTIVE TRANSDUSERS

Resistance of an electrical conductor is given by,

$$R=\rho l/A$$

Where ,

R = Resistance in „Ω"

P = Resistivity of the conductor (Ω - cm)

l = Length of the conductor in cm.

A = Cross-sectional area of the metal conductor in cm2

It is clear from the equation that, the electrical resistance can be varied by varying,
(i) Length

(ii) Cross-sectional areaand

(iii) Resistivity or combination ofthese.

Principle:-
A change in resistance of a circuit due to the displacement of an object is the measure of displacement of that object ,method of changing the resistance and the resulting devices are summarized in the following

Method of changing resistance-
Length - Resistance can be changed varying the length of the conductor,(linear and rotary).

Dimensions - When a metal conductor is subjected to mechanical strain, change in dimensions of the conductor occurs, that changes the resistance of theconductor.

Resistivity -
When a metal conductor is subjected to a change in temperature and change in resistivity occurs which changes resistance of the conductor.

Resulting device:-
Resistance potentiometers orsliding contact devicesdisplacements ,Electrical resistance strain gauges.Thermistor andRTD

Use:-
the resistive transducer used for the measurement of linear and angular, and used for the temperature mechanical strainmeasurement.

How Potentiometer works

A potentiometer is a resistive sensor used to measure linear displacements as well as rotary motion. In a potentiometer an electrically conductive wiper slides across a fixed resistive element. A voltage is applied across the resistive element. Thus a voltage divider circuit is formed. The output voltage(Vout) is measured as shown in the figure below. The output voltage is proportional to the distance travelled.

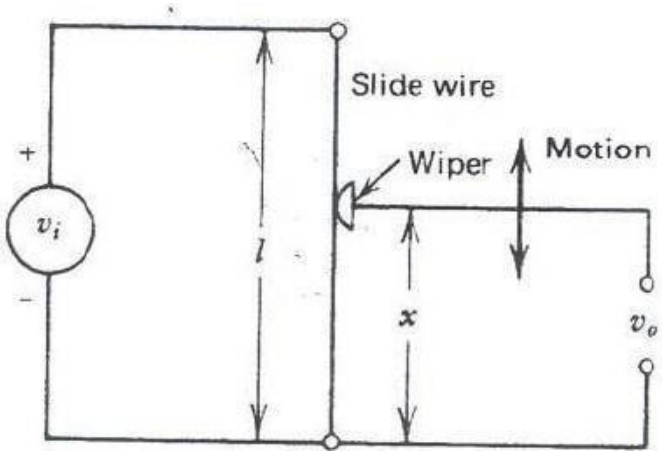

There are two types of potentiometer, linear and rotary potentiometer. The linear potentiometer has a slide or wiper. The rotary potentiometer can be a single turn or multi turn.

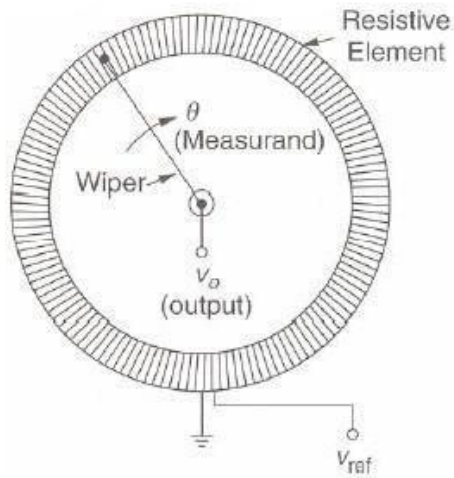

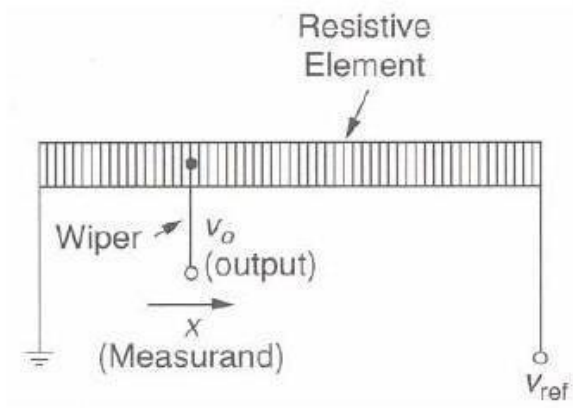

The important parameters while selecting a potentiometer are

•Operating temperature

•Shock and vibration

•Humidity

•Contamination and seals

•life cycle

•dither

Types of Potentiometer:

Wire-Wound type potentiometer

• The resistance range between 10Ω and 10MΩ

• The resistance increase in a stepwisemanner.

- It is possible to construct potentiometers with 100 –200 turns per cm length (The resolution range between 0.1 to 0.05mm).

• Linear potentiometers are available in many lengths up to1m.

- Helical potentiometers are commercially available with 50 to 60 turns (The angular displacement is between 18000 – 21600degree)

• Potentiometer life exceed 1 millioncycles.

Thin film type potentiometer

• Higher resolution.

• Lower noise.

• Longer life (exceed 10 millioncycles)

• Resistance of 50 to 100 Ω/mm can be obtained with conductive plasticfilm.

• Commercially available resolution is 0.001mm.

- Power rating $P = \frac{V_{in}^2}{R_P}$

  $V_{in(\max)} = \sqrt{PR_P}$

- Sensitivity $V_o = \frac{V_{in}}{L} x$

  $Sensitivity = \frac{V_{in}}{L}$

- Linearity $V_o = V_{in}(\frac{R}{R_P})\left[\frac{R_M/R_P}{(R_M/R_P)+(R/R_P)-(R/R_P)^2}\right]$

- Optimum sensitivity (0.2 V/degree and 2 V/cm)

Some of the advantages of the potentiometer are

•Easy to use
•low cost
•High amplitude output
•Proven technology
•Easily available

Some of the disadvantages of the potentiometer are

•Since the wiper is sliding across the resistive element there is a possibility of friction and wear. Hence the number of operating cycles are limited.
•Limited bandwidth
•Inertialloading

Some of the applications of the potentiometer are

•Linear displacementmeasurement
•Rotary displacementmeasurement
•Volume control
•Brightness control
•Liquid level measurements using float

Strain Gauge

Strain gage is one of the most popular types of transducer. It has got a wide range of applications. It can be used for measurement of force, torque, pressure, acceleration and many other parameters. The basic principle of operation of a strain gage is simple: when strain is applied to a thin metallic wire, its dimension changes, thus changing the resistance of the wire. Let us first investigate what are the factors, responsible for the change in resistance.

Gage Factor

Let us consider a long straight metallic wire of length *l* circular cross section with diameter *d* (fig). When this wire is subjected to a force applied at the two ends, a strain will be generated and as a result, the

dimension will change (*l*changingto $l + \Delta l$, *d* changing to $d + \Delta d$ and *A*changingto $A + \Delta A$). For the time being, we are considering that all the changes are in positive direction. Now the resistance of thewire:

Let us consider a long straight metallic wire of length l circular cross section with diameter d (fig. 5). When this wire is subjected to a force applied at the two ends, a strain will be generated and as a result, the dimension will change (l changing to $l+\Delta l$, d changing to $d+\Delta d$ and A changing to $A+\Delta A$). For the time being, we are considering that all the changes are in positive direction. Now the resistance of the wire:

$$R = \frac{\rho l}{A}, \text{ where } \rho \text{ is the resistivity.}$$

From the above expression, the change in resistance due to strain:

$$\Delta R = \left(\frac{\partial R}{\partial l}\right)\Delta l + \left(\frac{\partial R}{\partial A}\right)\Delta A + \left(\frac{\partial R}{\partial \rho}\right)\Delta \rho$$

$$= \frac{\rho}{A}\Delta l - \frac{\rho}{A^2}\Delta A + \frac{l}{A}\Delta \rho$$

$$= R\frac{\Delta l}{l} - R\frac{\Delta A}{A} + R\frac{\Delta \rho}{\rho}$$

or,

$$\frac{\Delta R}{R} = \frac{\Delta l}{l} - \frac{\Delta A}{A} + \frac{\Delta \rho}{\rho} \qquad (6)$$

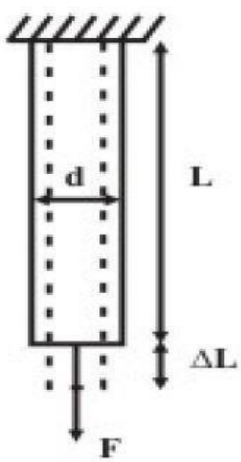

Fig:Change of Resistance with strain

Now, for a circular cross section, $A = \frac{\pi d^2}{4}$; from which, $\Delta A = \frac{\pi d}{2}\Delta d$. Alternatively,

$$\frac{\Delta A}{A} = 2\frac{\Delta d}{d}$$

Hence,

$$\frac{\Delta R}{R} = \frac{\Delta l}{l} - 2\frac{\Delta d}{d} + \frac{\Delta \rho}{\rho} \qquad (7)$$

Now, the *Poisson's Ratio* is defined as:

$$\upsilon = -\frac{lateral \quad strain}{longitudinal \quad strain} = -\frac{\Delta d / d}{\Delta l / l}$$

The Poisson's Ratio is the property of the material, and does not depend on the dimension. So, (6) can be rewritten as:

$$\frac{\Delta R}{R} = (1 + 2\upsilon)\frac{\Delta l}{l} + \frac{\Delta \rho}{\rho}$$

Hence,

$$\frac{\Delta R / R}{\Delta l / l} = 1 + 2\upsilon + \frac{\Delta \rho / \rho}{\Delta l / l}$$

The last term in the right hand side of the above expression, represents the change in resistivity of the material due to applied strain that occurs due to the *piezo-resistance property* of the material. In fact, all the elements in the right hand side of the above equation are independent of the geometry of the wire, subjected to strain, but rather depend on the material property of the wire. Due to this reason, a term *Gage Factor* is used to characterize the performance of a strain gage. The Gage Factor is defined as:

$$G := \frac{\Delta R / R}{\Delta l / l} = 1 + 2\upsilon + \frac{\Delta \rho / \rho}{\Delta l / l} \qquad (8)$$

For normal metals the Poisson's ratio υ varies in the range:

$$0.3 \le \upsilon \le 0.6,$$

while the piezo-resistance coefficient varies in the range:

$$0.2 \le \frac{\Delta \rho / \rho}{\Delta l / l} \le 0.6.$$

Thus, the Gage Factor of metallic strain gages varies in the range 1.8 to 2.6. However, the semiconductor type strain gages have a very large Gage Factor, in the range of 100-150. This is attained due to dominant piezo-resistance property of semiconductors. The commercially available strain gages have certain fixed resistance values, such as, 120Ω, 350 Ω, 1000 Ω, etc. The manufacturer also specifies the Gage Factor and the maximum gage current to avoid self-heating (normally in the range 15 mA to 100 mA).

The choice of material for a metallic strain gage should depend on several factors. The material should have low temperature coefficient of resistance. It should also have low coefficient for thermal expansion. Judging from all these factors, only few alloys qualify for a commercial metallic strain gage. They are:

Advance (55% Cu, 45% Ni): Gage Factor between 2.0 to 2.2

Nichrome (80% Ni, 20% Co): Gage Factor between 2.2 to 2.5

Apart from these two, *Isoelastic* -another trademarked alloy with Gage Factor around 3.5 is also in use. Semiconductor type strain gages, though having large Gage Factor, find limited use, because of their high sensitivity and nonlinear characteristics.

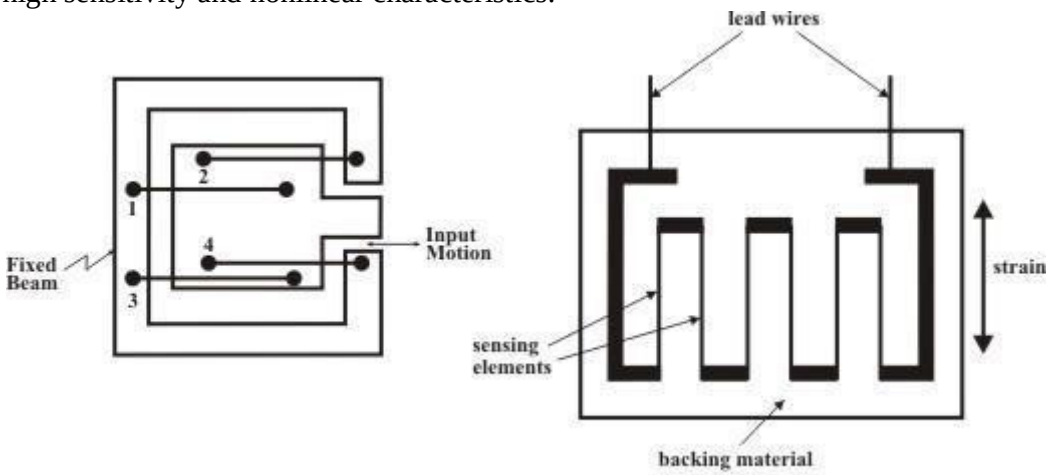

Fig. 6 (a) Unbonded metallic strain gage, (b) bonded metal foil type strain gage

Metallic Strain Gage

Most of the strain gages are metallic type. They can be of two types: *unbonded* and *bonded*. The unbonded strain gage is normally used for measuring strain (or displacement) between a fixed and a moving structure by fixing four metallic wires in such a way, so that two are in compression and two are in tension, as shown in fig. 6 (a). On the other hand, in the bonded strain gage, the element is fixed on a backing material, which is permanently fixed over a structure, whose strain has to be measured, with adhesive. Most commonly used bonded strain gages are *metal foil type*. The construction of such a strain gage is shown in fig. 6(b). The metal foil type strain gage is manufactured by photo-etching technique. Here the thin strips of the foil are the active elements of the strain gage, while the thick ones are for providing electrical connections. Because of large area of the thick portion, their resistance is small and they do not contribute to any change in resistance due to strain, but increase the heat dissipation area. Also it is easier to connect the lead wires with the strain gage. The strain gage in fig. 6(b) can measure strain in one direction only. But if we want to measure the strain in two or more directions at the same point, strain gage *rosette*, which is manufacturedbystackingmultiplestraingagesindifferentdirections,isused.Fig.7showsathree-element strain gage rosette stacked at 45^0.

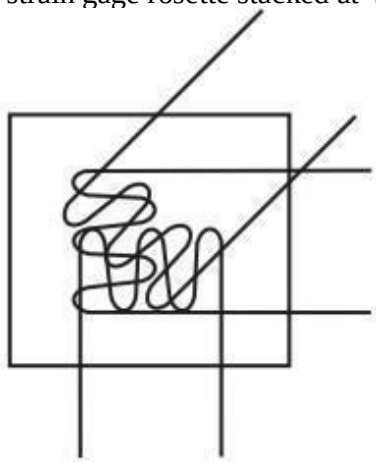

Fig. 7 Three-element strain gage rosette- 45^0 stacked.

The *backing material*, over which the strain gage is fabricated and which is fixed with the strain measuring structure has to satisfy several important properties. Firstly, it should have high mechanical strength; it should also have high dielectric strength. But the most important it should have is that it should be non-hygroscopic, otherwise, absorption of moisture will cause bulging and generate local strain. The backing materials normally used are impregnated paper, fibre glass, etc. The *bonding material* used for fixing the strain gage permanently to the structure should also be non- hygroscopic. Epoxy and Cellulose are the bonding materials normallyused.

Semiconductor type Strain Gage

Semiconductor type strain gage is made of a thin wire of silicon, typically 0.005 inch to 0.0005 inch, and length 0.05 inch to 0.5 inch. They can be of two types: *p*-type and *n*-type. In the former the resistance increases with positive strain, while, in the later the resistance decreases with temperature. The construction and the typical characteristics of a semiconductor strain gage are shown in fig.8.
MEMS pressure sensors is now a days becoming increasingly popular for measurement of pressure. It is made of a small silicon diagram with four piezo-resistive strain gages mounted on it. It has an in- built signal conditioning circuits and delivers measurable output voltage corresponding to the pressure applied. Low weight and small size of the sensor make it suitable for measurement of pressure in specificapplications.

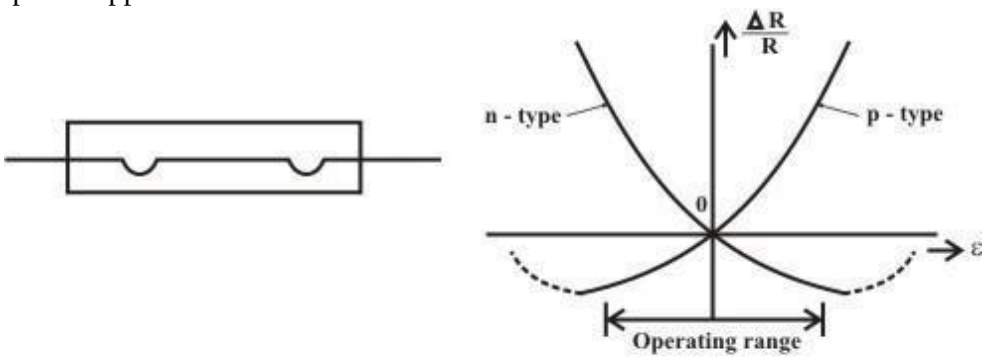

Fig. 8 (a) construction and (b) characteristics of a semiconductor strain gage

Thermistors:
Basically thermistor is a contraction of a word 'thermal resistors', The resistors depending on temperature are thermal resistors. Thus resistance thermometers are also thermistors having positive -temperature coefficients. But generally the resistors having negative temperature coefficients (NTC) are called thermistors. The resistance of a thermistor decreases as temperature increases. The NTC of thermistors can be as large as few percent per degree celcius change in temperature. Thus the
thermistors are very sensitive and can detect very small changes in temperature too.

Construction of thermistor:

Thermistors are composed of a sintered mixture of metallic oxides, such as manganese, nickel, cobalt, copper, iron, and uranium. Their resistances at ambient temperature may range from 100 n to 100 ill. Thermistors are available in a wide variety of shapes and sizes as shown in the Fig. Smallest in size are the beads with a diameter of 0.15 mm to 1.25 mm. Beads may be sealed in the tips of solid glass rods to form probes. Disks and washers are made by pressing thermistor

materia~ under high pressure into Hat cylindrical shapes. Washers can be placed in series or in parallel to increase power dissipation rating.

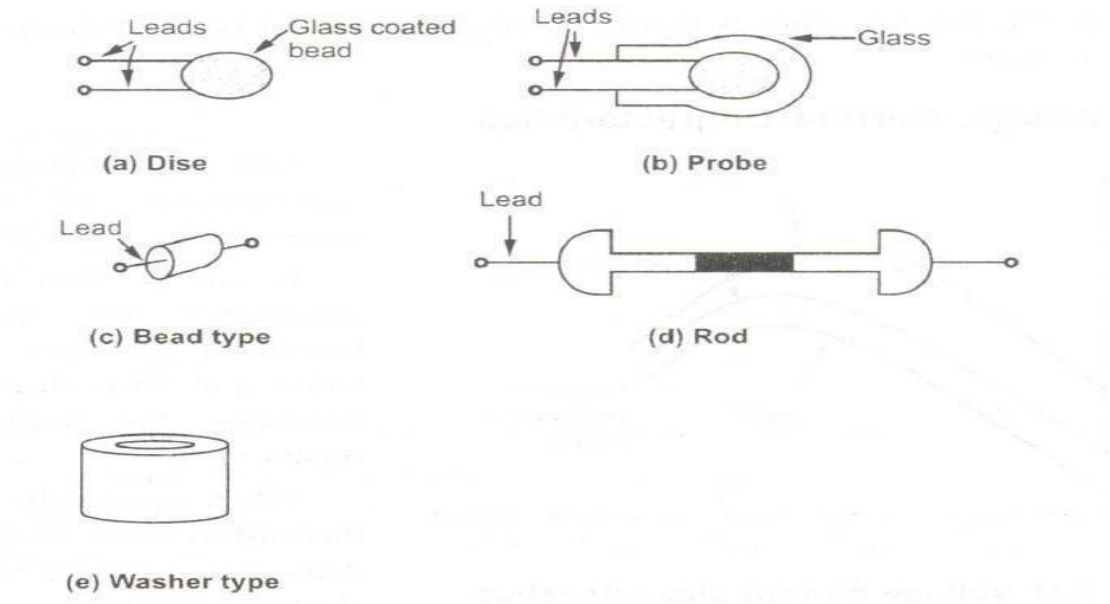

Thermistors are well suited for precision temperature measurement, temperature control, and temperature compensation, because of their. very large change in resistance with temperature. They are widely
used for measurements in the temperature range -1000 C to +2000 C. The measurement of the change in resistance with temperature is carried out with a Wheatstone bridge.

Inductive Transducer

Inductive transducers work on the principle of inductance change due to any appreciable change in the quantity to be measured i.e. measured. For example, LVDT, a kind of **inductive transducers**, measures displacement in terms of voltage difference between its two secondary voltages. Secondary voltages are nothing but the result of induction due to the flux change in the secondary coil with the displacement of the iron bar. Anyway LVDT is discussed here briefly to explain the principle of **inductive transducer**. LVDT will be explained in other article in more detail. For the time being let‟s focus on basic introduction of **inductive transducers**. Now first our motive is to find how the **inductive transducers** can be made to work. This can be done by changing the flux with the help of measured and this changing flux obviously changes the inductance and this inductance change can be calibrated in terms of measured. Hence **inductive transducers** use one of the following principles for its working.

1. Change of selfinductance
2. Change of mutualinductance
3. Production of eddycurrent

Change of Self Inductance of Inductive Transducer

$$L = \frac{N^2}{R}$$

We know very well that self inductance of a coil isgiven by $L = \frac{N^2 \mu A}{l}$ Where, N = number of turns.R = reluctance of the magnetic circuit. Also we know that reluctance R is given by $R = \frac{l}{\mu A}$

where μ = effective permeability of the medium in and around the coil.

$L = N^2 \mu G$ Where, G = A/l and called geometric form factor. A = area of cross-section of coil. l = length of the coil. So, we can vary self inductance by

- Change in number of turns,N,
- Changing geometric configuration,G,
- Changingpermeability

For the sake of understanding we can say that if the displacement is to be measured by the **inductive transducers**, it should change any of the above parameter for causing in the change in self inductance.

Change of Mutual Inductance of Inductive Transducer

Here transducers, which work on change of mutual inductance principle, use multiple coils. We use here two coils for the sake of understanding. Both coils have their self inductance as well. So let"s denote their self inductance by L_1 and L_2. Mutual inductance between these two coils is given by $M = K\sqrt{L_1 L_2}$ Thus mutual inductance can be changed by varying self inductance or by varying coefficient of coupling, K. The methods of changing self inductance we already discussed. Now coefficient of coupling depends on the distance and orientation between two coils. Thus for the measurement of displacement we can fix one coil and make other movable which moves with the source whose displacement is to be measured. With the change in distance in displacement coefficient of coupling changes and it causes the change in mutual inductance. This change in mutual inductance can be calibrated with the displacement and measurement can be done.

Production of Eddy Current of Inductive Transducer

We know that when a conducting plate is placed near a coil carrying alternating current, a circulating current is induced in the plate called "EDDY CURRENT". This principle is used in such type of **inductive transducers**. Actually what happens? When a coil is placed near to coil carrying alternating current, a circulating current is induced in it which in turn produces its own flux which try to reduce the flux of the coil carrying the current and hence inductance of the coil changes. Nearer the plate is to the coil, higher will be eddy current and higher is the reduction in inductance and vice versa. Thus inductance of coil varied with the variation of distance between coil and plate. Thus the movement of the plate can be calibrated in terms of inductance change to measure the quantity like displacement.

Real Life Application of Inductive Transducer

Inductive transducers find application in proximity sensors which are used for position

measurement, dynamic motion measurement, touch pads etc. Particularly **inductive transducer** is used for the detection of type of metal, finding missing parts or counting the number of objects.

variable differential transformer (LVDT)

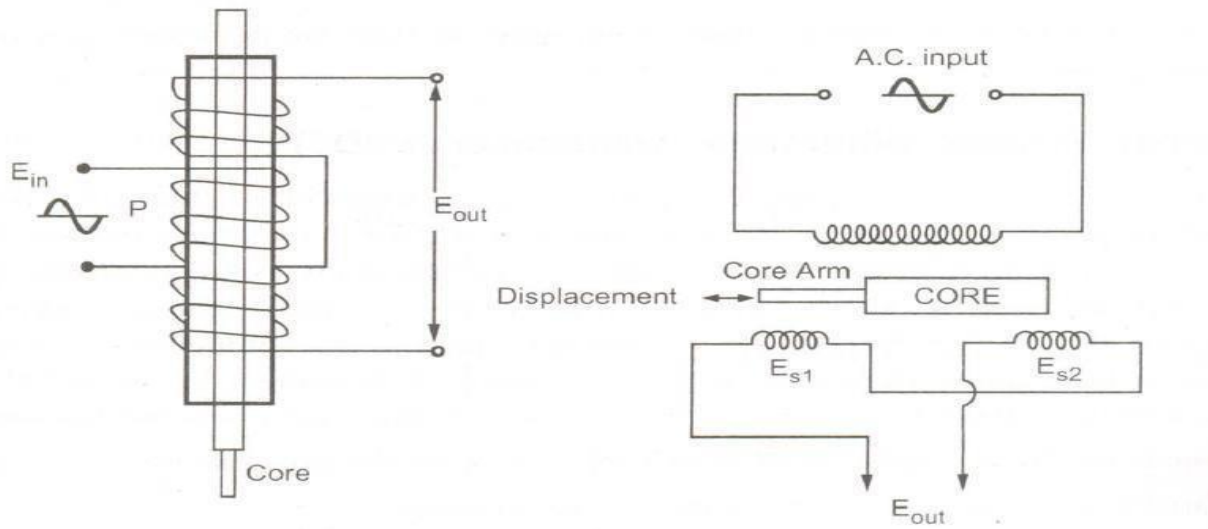

When an externally applied force moves the core to the left-hand position, more magnetic flux links the left-hand coil than the righthand coil. The emf induced in the left-hand coil, ES], is therefore larger than the induced emf of the right-hand [oil, Es2' The magnitude of the output voltage is then equal to the difference between the two secondary voltages and it is in phase with the voltage of the left-hand
coil.

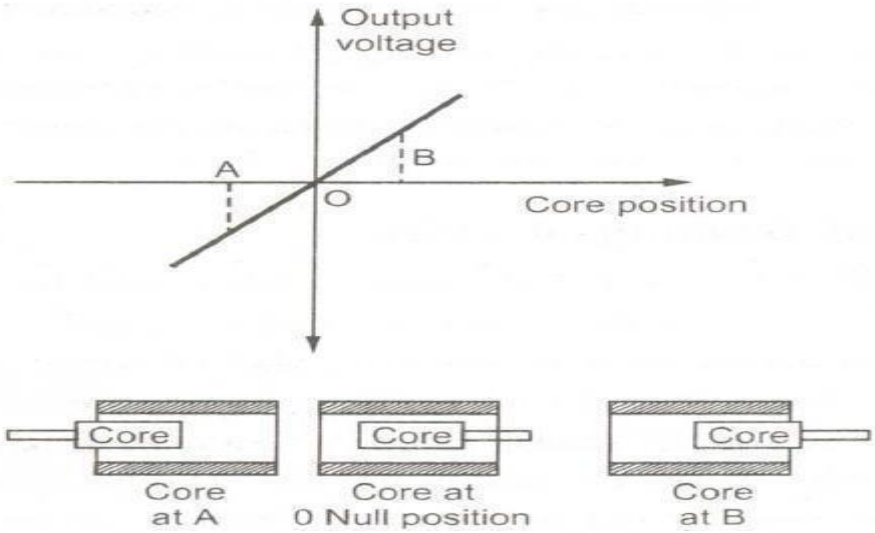

Output voltage of LVDT at different core positions

Construction of LVDT

Main Features of Construction are as,

- The transformerconsists of a primary winding P and two secondary winding S1 and S2 wound on a cylindrical former(which is hollow in nature and will containcore).

- Both the secondary windings have equal number of turns and are identically placed on the eitherside of primarywinding
- The primary winding is connected to an AC source which produces a flux in the air gap and voltages are induced in secondarywindings.
- A movable soft iron core is placed inside the former and displacement to be measured isconnectedto the ironcore.
- The iron core is generally of high permeability which helps in reducing harmonics and high sensitivity ofLVDT.
- The LVDT is placed inside a stainless steel housing because it will provide electrostaticand electromagneticshielding.
- The both the secondary windings are connected in such a way that resulted output is the difference of the voltages of twowindings.

Principle of Operation and Working

As the primary is connected to an AC source so alternating current and voltages are produced in the secondary of the LVDT. The output in secondary S_1 is e_1 and in the secondary S_2 is e_2. So the differential output is, $\mathbf{e_{out} = e_1 - e_2}$This equation explains the **principle of Operation of LVDT**.

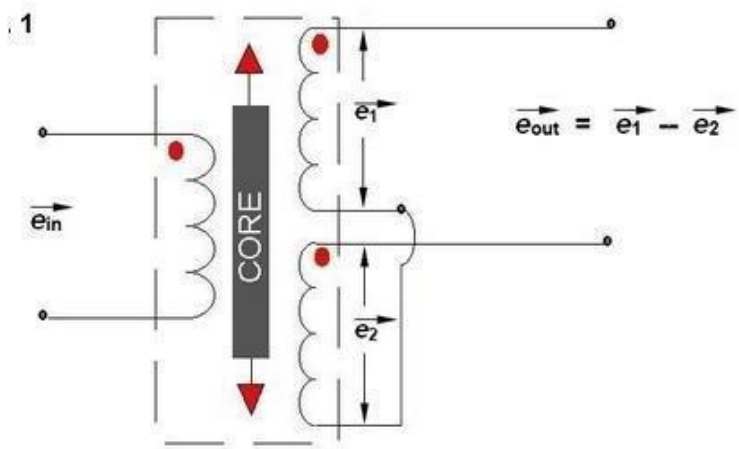

Now three cases arise according to the locations of core which explains the working of LVDT are discussed belowas,

- **CASE I** When the core is at null position (for no displacement) When the core is at null position then the flux linking with both the secondary windings is equal so the induced emf is equal in both the windings. So for no displacement the value of output e_{out} is zero as e_1 and e_2 both are equal. Soit shows that no displacement tookplace.
- **CASE II** When the core is moved to upward of null position (For displacement to the upward of reference point) In the this case the flux linking with secondary winding S_1 is more as compared to

flux linking with S_2. Due to this e_1 will be more as that of e_2. Due to this output voltage e_{out} is positive.

- **CASE III** When the core is moved to downward of Null position (for displacement to the downward of reference point) In this case magnitude of e_2 will be more as that of e_1. Due to this output e_{out} will be negative and shows the output to downward of referencepoint.

Output V_S Core Displacement A linear curve shows that output voltage varies linearly with displacement of core.

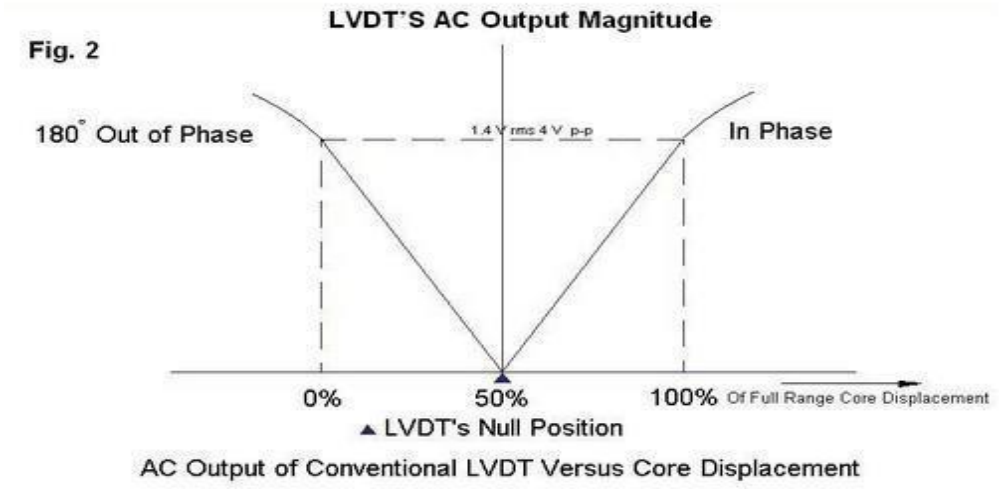

Some important points about magnitude and sign of voltage induced in LVDT

- The amount of change in voltage either negative or positive is proportional to the amountof movement of core and indicates amount of linear motion.
- By noting the output voltage increasing or decreasing the direction of motion can bedetermined
- The output voltage of an LVDT is linear function of core displacement.

Advantages of LVDT

- **High Range -** The LVDTs have a very high range for measurement of displacement.they can used for measurement of displacements ranging from 1.25mm to250mm
- **No Frictional Losses -** As the core moves inside a hollow former so there is no loss ofdisplacement input as frictional loss so it makes LVDT as very accuratedevice.
- **HighInputandHighSensitivity-**TheoutputofLVDTissohighthatitdoesn"tneedany amplification.the transducer posseses a high sensitivity which is typically about40V/mm.
- **Low Hysteresis -** LVDTs show a low hysteresis and hence repeatability is excellent underall conditions
- **Low Power Consumption -** The power is about 1W which is very as compared to othertransducers.
- **Direct Conversion to Electrical Signals -** They convert the linear displacement toelectricalvoltage which are easy toprocess

Disadvantages of LVDT

- LVDT is sensitive to stray magnetic fields so they always require a setup to protect them fromstray magneticfields.
- They are affected by vibrations andtemperature.

It is concluded that they are advantageous as compared than any other inductive transducers.

Applications of LVDT

1. They are used in applications where displacements ranging from fraction of mm to few cm are to be measured. The LVDT acting as a primary Transducer converts the displacement to electrical signal directly.
2. They can also acts as the secondary transducers. E.g. the Bourbon tube which acts as a primary transducer and covert pressure into linear displacement.then LVDT coverts this displacementinto electrical signal which after calibration gives the ideas of the pressure offluid.

Capacitive Transducers

A capacitor consists of two conductors (plates) that are electrically isolated from one another by a nonconductor (dielectric). When the two conductors are at different potentials (voltages), the system is capable of storing an electric charge. The storage capability of a capacitor is measured in farads.The principle of operation of capacitive transducers is based upon the equation for capacitance of a parallel plate capacitor as shown inFig.

$$Capacitance \qquad C = \frac{\varepsilon A}{D}$$

Where, A = Overlapping area of plates; m^2, d

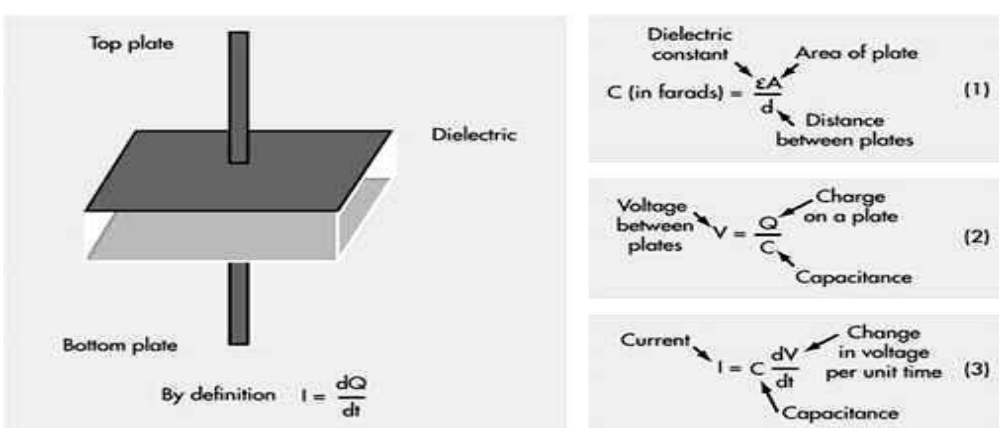

= Distance between two plates;m,

ε = Permittivity (dielectric constant); F/m.

Fig. Parallel plate capacitor

The capacitance is measured with a bridge circuits. The output impedance Z of a capacitive transducer is:

$Z = 1/2\pi fC$

Where: Z =Impedance

f = frequency, 50 Hz. C

=capacitance

In general, the output impedance of a capacitive transducer is high. This fact calls for a careful design of the output circuitry. The capacitive transducers work on the principle of change in capacitance of the capacitor. This change in capacitance could be caused by change in overlapping area A of the plates, change in the distance d between the plates and change in dielectric constant □ε

In most of the cases the above changes are caused by the physical variables, such as, displacement, force or pressure. Variation in capacitance is also there when the dielectric medium between the plates changes, as in the case of measurement of liquid or gas levels. Therefore, the capacitive transducers are commonly used for measurement of linear displacement, by employing the following effects as shown in Fig a and figb.

i) Change in capacitance due to change in overlapping area ofplates.
ii) Change in capacitance due to change in distance between the twoplates.
iii) Change in capacitance due to change in dielectric between the twoplates

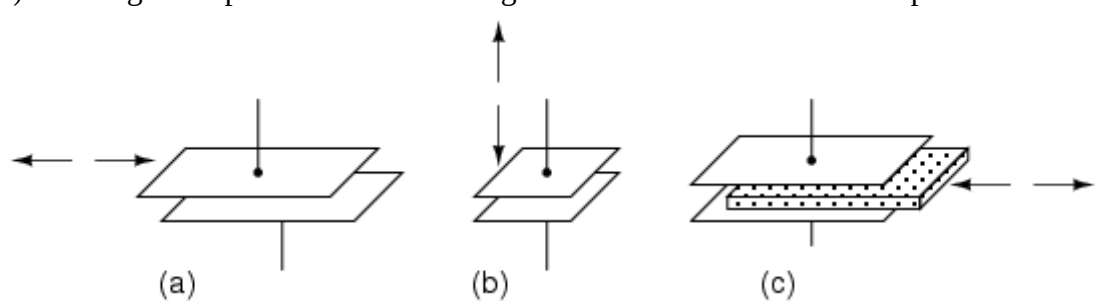

Fig.a Variable capacitive transducer varies; (a) area of overlap, (b) distance between plates, (c) amount of dielectric between plates

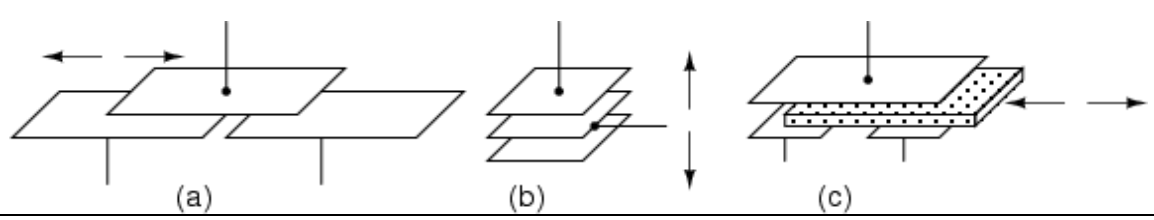

Fig.b Differential capacitive transducer varies capacitance ratio by changing: (a) area of overlap, (b) distance between plates, (c) dielectric between plates

As may be seen in Fig b, all of the differential devices have three wire connections rather than two: one wire for each of the end plates and one for the common plate. As the capacitance between one of the endplates and the common plate changes, the capacitance between the other end plate and the common plate also changes in the opposite direction.

a) Transducers Using Change in Area ofPlates

Examining the equation for capacitance, it is found that the capacitance is directly proportional to the area, A of the plates. Thus, the capacitance changes linearly with change in area of plates. Hence this type of capacitive transducer is useful for measurement of moderate to large displacements say from 1 mm to several cm. The area changes linearly with displacement and also thecapacitance.
For a parallel plate capacitor, the capacitance is:

$$C = \frac{\varepsilon A}{d} = \frac{\varepsilon l w}{d} F$$

Where, l = length of overlapping part of plates; m, and w
= width of overlapping part of plates;m.

$$Sensitivity \qquad S = \frac{\partial C}{\partial l} = \varepsilon \frac{w}{d} F/m$$

The sensitivity is constant and therefore there is linear relationship between capacitance and displacement.

This type of a capacitive transducer is suitable for measurement of linear displacement ranging from 1 to 10 cm. The accuracy is as high as 0.005%.

b) Transducers Using Change in Distance betweenPlates

Fig. 17.2(b) shows the basic form of a capacitive transducer employing change in distance between the two plates to cause the change in capacitance. One plate is fixed and the displacement to be measured is applied to the other plate which is movable. Since, the capacitance, C, varies inversely as the distance d, between the plates the response of this transducer is not linear. Thus this transducer is useful only for measurement of extremely small displacements.

$$Sensitivity \qquad S = \frac{\partial C}{\partial l} = -\frac{\varepsilon A}{d^2}$$

Thus the sensitivity of this type of transducer is not constant but varies over the range of the transducer. The relationship between variations of capacitance with variation of distance between plates is hyperbolic and is only approximately linear over a small range of displacement. The linearity can be closely approximated by use of a piece of dielectric material like mica having a high dielectric constant, such as, a thin piece of mica.

c) Transducers Using Change in dielectric constant betweenPlates

If the area (A) of and the distance (d) between the plates of a capacitor remain constant, capacitance will vary only as a function of the dielectric constant (ε) of the substance filling the gap between the plates. If the space between the plates of a capacitor is filled with an insulator, the capacitance of the capacitor will change compared to the situation in which there is vacuum between the plates. The change in the capacitance is caused by a change in the electric field between the plates.

The value of dielectric constant is initially set by design in the choice of dielectric material used to make the capacitor. Many factors will cause the ε to change, and this change in ε will vary for different materials. The major factors that will cause a change in ε are moisture, voltage, frequency, and temperature. The dielectric constant of a process material can change due to variations in temperature, moisture, humidity, material bulk density, and particle size etc. The ε in the basic formula is the effective dielectric constant of the total space between the electrodes. This space may consist of the dielectric material, air, and even moisture, if present. The figure shows that how in a capacitor the position of the dielectric is varied to vary the capacitance. Physical variables, such as, displacement, force or pressure can cause the movement of dielectric material in the capacitor plates, resulting in changes in the effective dielectric constant, which in turn will change thecapacitance.

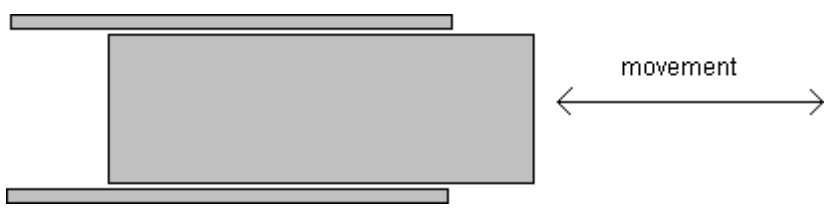

Fig. Change in capacitance due to movement of dielectric between plates

The major advantages of capacitive transducers are that they require extremely small forces to operate them and hence are very useful for use in small systems. They are extremely sensitive and require small power to operate them. Owing to their good frequency response they are very useful for dynamicstudies.

The disadvantages of capacitive transducers include their non-linear behaviour on account of edge effects and the effects of stray capacitances especially when the transducers have a low value of capacitance. Therefore guard rings must be used to eliminate this effect. The metallic parts of the capacitive transducers must be insulated from each other. In order to reduce the effects of stray capacitances, the frames must be earthed.

Capacitive transducers can be used for measurement of both linear and angular displacements. The

capacitive transducers are highly sensitive and can be used for measurement of extremely

small displacements down to the order of molecular dimensions, i.e., 0.1×10^{-6} mm. On the other hand, they can be used for measurement of large displacements up to about 30 m as in aeroplane altimeters. The change in area method is used for measurement of displacements ranging from 10 to 100 mm. Capacitive transducers can be used for the measurement of force and pressure. The force and pressure to be measured are first converted to displacement which causes a change of capacitance. Capacitive transducers can also be used directly as pressure transducers in all those cases where the dielectric constant of a medium changes with pressure. They can be used for measurement of humidity in gases and moisture content in soil / food productsetc.

Thermocouples

Basically thermocouple consists of two different metals which are placed in contact with each other as

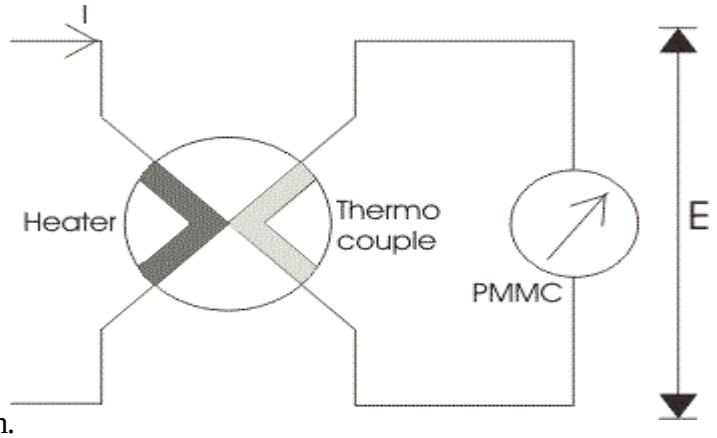

shown in the diagram.

First part is called the heater element because when the current will flow through this, a heat is produced and thus the temperature will increased at the junction. At this junction an emf is produced which is approximately proportional to the temperature difference of hot and cold junctions.

The emf produced is a DC voltage which is directly proportional to root mean square value of electriccurrent. A permanent magnet moving coil instrument is connected with the second part to read the current passing through the heater. One question must be arise in our mind that why we have used only a permanent magnet coil instrument? Answer to this question is very easy it is because PMMC instrument has greater accuracy and sensitivity towards the measurement of DC value. The **thermocouple type instruments** employ thermocouple in their construction. Thermocouple type instruments can be used for both ac and DC applications. Also thermocouple type of instruments has greater accuracy in measuring the current and voltages at very high frequency accurately.

Now we will look how the temperature difference is mathematically related to generated emf at the

junction in thermocouple type of instruments. Let us consider temperature of the heater element be T_a and the temperature of cold metal be T_b. Now it is found that the generated emf at the junction is related to temperature difference as:

$$e = a(T_a - T_b) + b(T_a - T_b)^2$$

Where a and b are constant whose values completely depends upon the type of metal we are using. The above equation represents parabolic function. The approximated value of a is from 40 to 50 micro volts or more per degree Celsius rise in temperature and value of constant b is very small and can be neglected if the air gap field of permanent magnet moving coil is uniform. Thus we can approximate the above temperature emf relation as $e = a(T_a - T_b)$, here we have assume b = 0. The currentflowing through the heater coil produces heat as I^2R where I is the root mean square value of current, if we assume the temperature of cold junction is maintained at room temperature then the rise in the temperature of the hot junction will be equal to temperature rise at the junction. Hence we can write (Ta-Tb)is directly proportional to I^2R or we can say $(T_a - T_b) = kI^2R$. Now the deflection angle x in moving coil instrument is equal to; x = Ke or $x = K[a(T_a - T_b)]$ hence we can write $k.K.a.I^2R = k_1I^2$, where k_1 is someconstant.
From the above equation we see that the instrument shows the square law response.

Construction of Thermocouple Type Instrument

Now let us look at the construction of Thermocouple type Instruments. Broadly speaking the thermocouple type of instruments consists of two major parts which are written below: (a) Thermo electric elements: The thermocouple type of instruments consists of thermo electric elements which can be of four types:

1. **Contact Type:** It has a separate heater which is shown in thediagram.

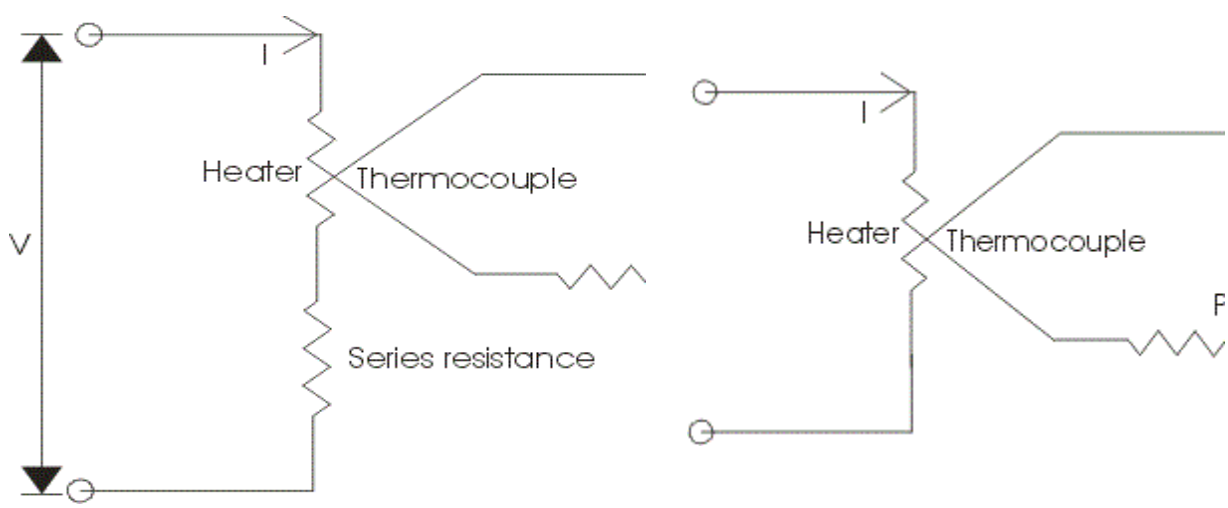

The action of thermocouple type instruments can be explained briefly as,

- At the junction the electrical energy is being converted to thermal energy in the heater element. A portion of the heat is transferred to the hot junction while most of the heat energy is dissipatedaway.

- The heat energy which is transferred to hot junction is again converted to electrical due to Seebeckeffect. Only a portion of electrical energy is converted into mechanical energy which is used to produce a deflecting torque. The overall efficiency of the system is low thus the instrument consumes high power. So there is a requirement of highly accurate and sensitive DCinstrument.

2. **Non Contact Type:** In non contact type there is insulation between the heating element and the thermocouple i.e. there no direct contact between two. Due to this these instruments are notmuch sensitive as compared contacttype.
3. **Vacuum Thermo-elements:** These types of instruments are mostly employed for the measurement of electric current at very high frequency of the order of 100 Mega hertz or more as these instruments retain their accuracy even at such highfrequency.
4. **Bridge Type:** These bridges are manufactured on the ac ratings usually from 100 mili amperes to 1 amperes. In this two thermocouple are connected to form a bridge which is shown in the figuregiven

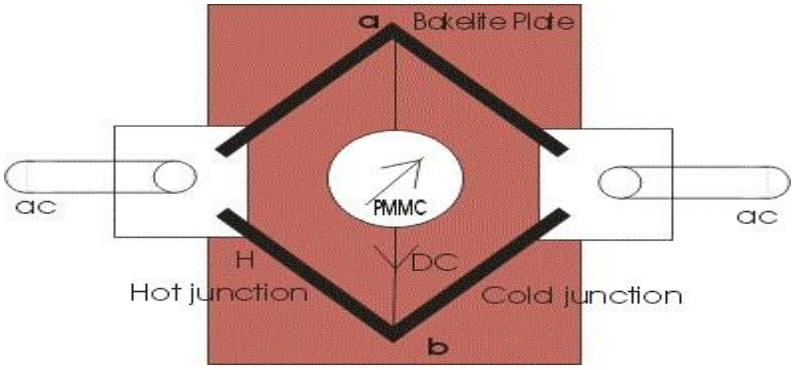

below:

5. There is no requirement of heating element, the electric current which directly passing through the thermocouple raises the temperature which is directly proportional to the I^2R losses. The bridge works on balanced condition at which there will be no current in the arm ab. The connected meter will show the potential difference between the junctions a andb.

Advantages of Thermocouple Type Instruments

Following are advantages of Thermocouple type of instruments,

1. The thermocouple type of instruments accurately indicates the root mean square value of currentand voltages irrespective of the waveform. There is a wide varieties of range of thermocouple instruments are available in themarket.
2. Thermocouple type of instruments give very accurate reading even at high frequency, thusthese types of instruments are completely free from frequencyerrors.

3. The measurement of quantity under these instruments is not affected by stray magneticfields.
4. These instruments are known for their highsensitivity.
5. Usually for measuring the low value of current bridge type of arrangement is used i.e. rangingfrom 0.5 Amperes to 20 Amperes while for measuring the higher value of current heater element is required to retain accuracy.

Disadvantages of Thermocouple Type Instruments

Instead of many advantages these type of instruments posses one disadvantage, The over load capacity of thermocouple type of instrument is small, even fuse is not able to the heater wire because heater wire may burn out before the fuse blows out.

Synchro Position Transducer Working Principle

We know that Syncro is an inductive device which works on the principle of rotating transformer. Here the term *rotating transformer* means the primary to secondary coupling can be changed by physically changing the relative orientation of the winding. So based on this working principle of syncro we can use it as position transducer.

Construction Of Position Transducer:

Position transducer is one of the basic application of the Synchro. It uses dumb-bell shaped rotor. Singlephase ac supply is given to the rotor of the Synchro. This rotor is mechanically coupled with the shaft of rotating element whose angular position is to be determined.

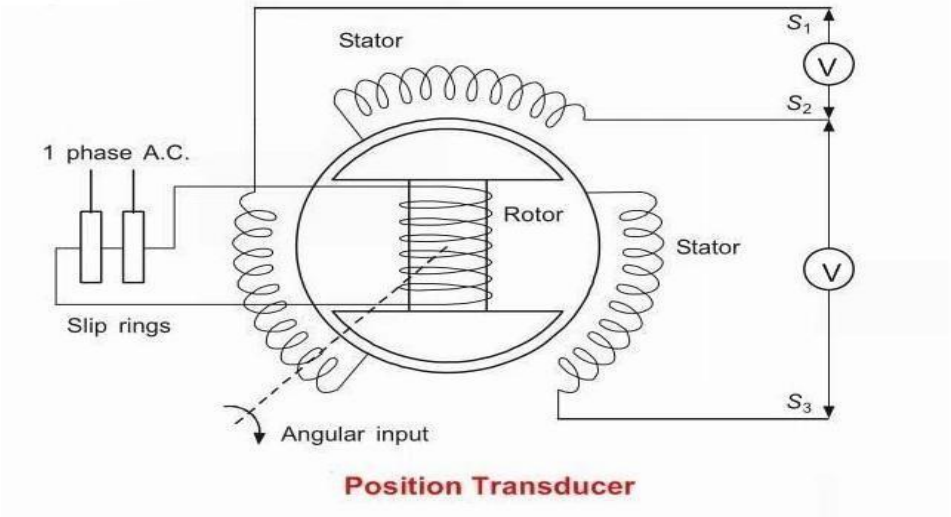

Position Transducer Working Principle:

We know that the stator of the synchro has three windings. These three winding of the stator are connected in star connection. Remaining ends of each winding are taken out to connect them with

the voltmeter as shown in the figure. When the angle of the rotor changes the output voltage i.e. the stator voltages of each winding is given by,

E1 = Eomcosθ sin wt = instantaneous voltage for stator windings S1.

E1 = Eom cos(θ+120) sin wt = instantaneous voltage for stator windings S2.
E1 = Eom cos(θ+240) sin wt = instantaneous voltage for stator windings

S3. Where

- θ= angular position of therotor
- Eom = peak value of voltage of eachwinding
- w= 2πf
- f= frequency of therotor
- t = time inseconds.

All instantaneous voltages are sinusoidal in nature. But they give different values of voltages at different position of rotor.

Thus using these three values of stator voltages we can easily measure the position of the rotor. Hence Synchro can be used as a position transducer.

Applications Of Position Transducer:

1) For measuring the angle of the rotating machine like antennaplatform.

2) Position transducer can be used as ratary position sensor for aircraft controlsurfaces

Piezoelectric transducer:

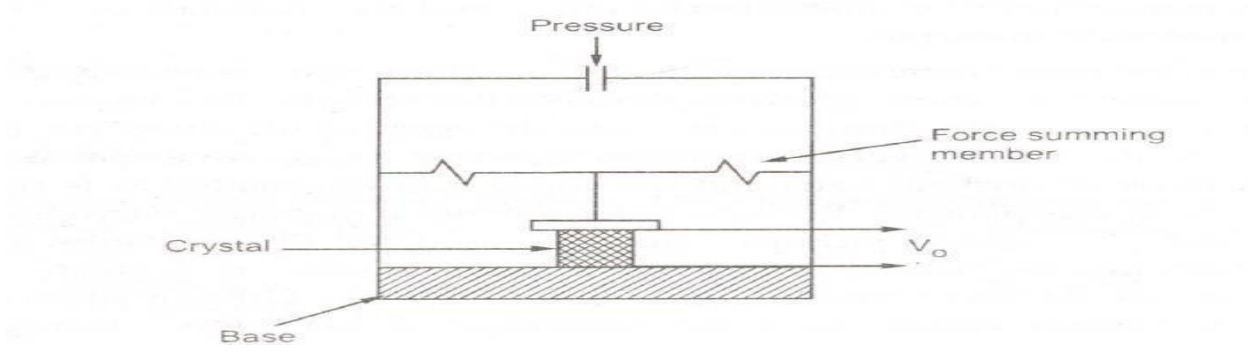

A piezoelectric quartz crystal is hexagonal prism shaped crystal, which has pyramids Jt both ends. This is shown in the Fig. (a). The marking of co-ordinate axes are fixed for such crystals. The axis

passing through the end points of pyramids is called optic axis or z axis. The axis passing through corners is called electrical axis or x axis while the aXIs passing through midpoints of opposite sides is called mechanical axis or y axis. The axes are shown in the

Photovoltaic cell:

Fig shows structure of photovoltaic cell. It shows that cell is actually a PN-junction diode with appropriately doped semiconductors. When photons strike on the thin p-doped upper layer, they are absorbed by the electrons in the n-layer; which causes formation of conduction electrons and holes. These conduction electrons and holes are separated by depletion region potential of the pn junction. When il load is connected across the cell, the depletion region potential causes the photocurrent to flow through the loadN

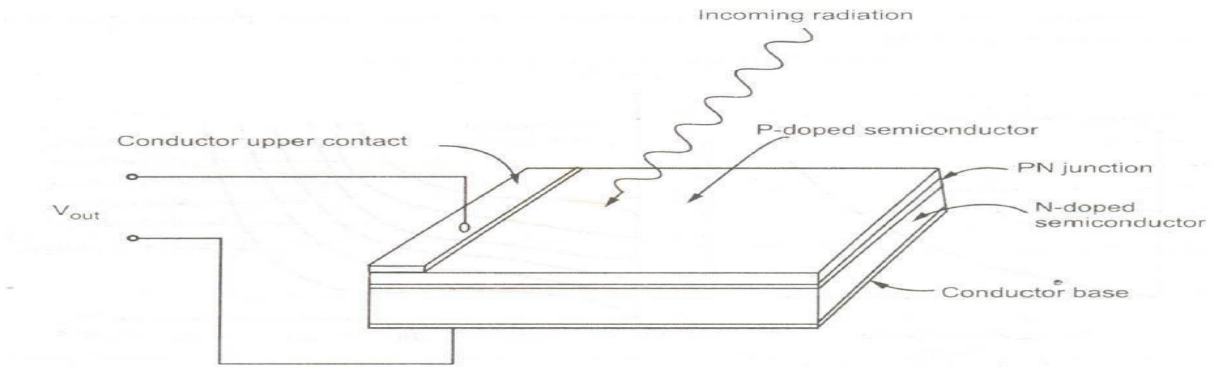

Phototransistor:

The photo transistor has a light sensitive collector to base junction. A lens is used in a transistor package to expose base to an incident light. When no light is incident, a small leakage current flows from collector to emitter called IeEO, due to small thermal generation. This is very small current, of the order of nA. This is called a dark current. When the base is exposed to the light, the base current is produced

which is proportional to the light intensity. Such photoinduced base current is denoted as I)...The resulting collector current is given by, The structure of a phototransistor is shown in the Fig. (a) while the symbol is shown in theFig.

$$I_C \approx h_{fe} I_\lambda$$

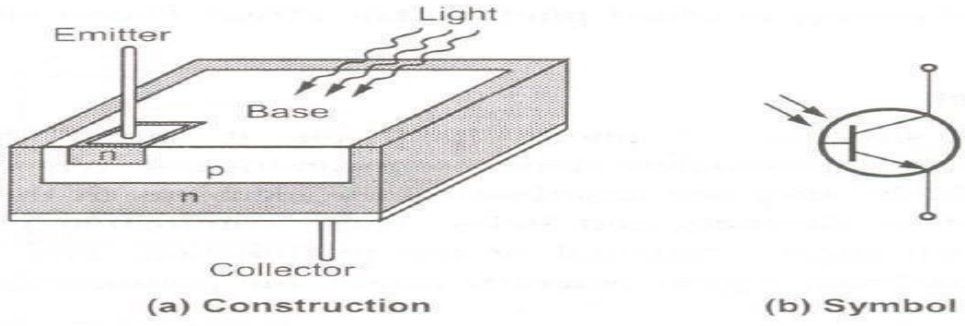

To generate more base current proportional to the light, larger physical area of the base is exposed to the light. The fig .shows the graph of base current against· the radiation flux density measured in mW/ cm2. The Fig. (b) shows the collector characteristics of a phototransistor. As light intensity increases, the base current increases exponentially. Similarly the collector current also increases corresponding to the increase in the light intensity. A phototransistor can be either a two lead or a three lead device. Ina
three lead device, the base lead is brought out so that it can be used as a conventional BJT with or without the light sensitivity feature. In a two lead device, the base is not electrically available and the device use is

totally light dependent. The use of phototransistor as a two lead device is shown in the Fig. (a) while the Fig. (b) shows the typical collector characteristic curves.

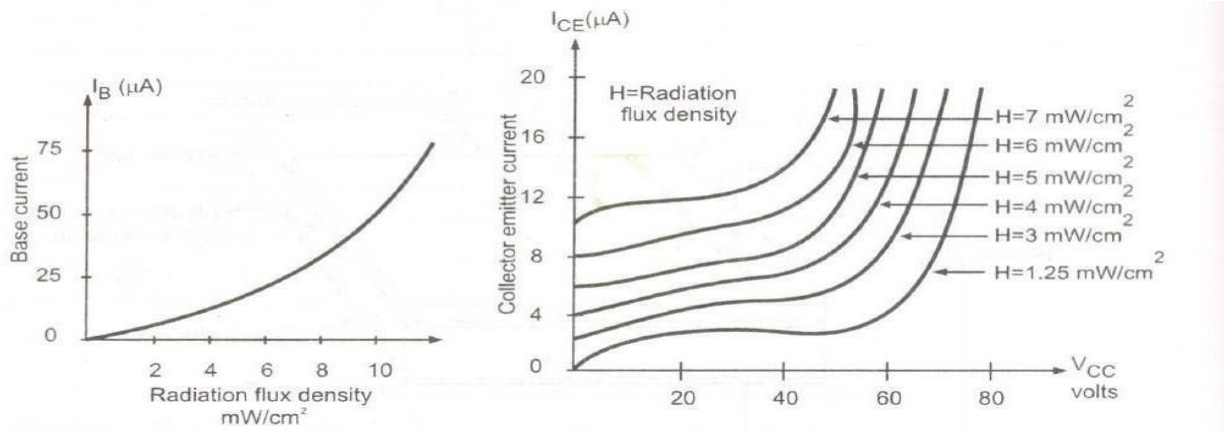

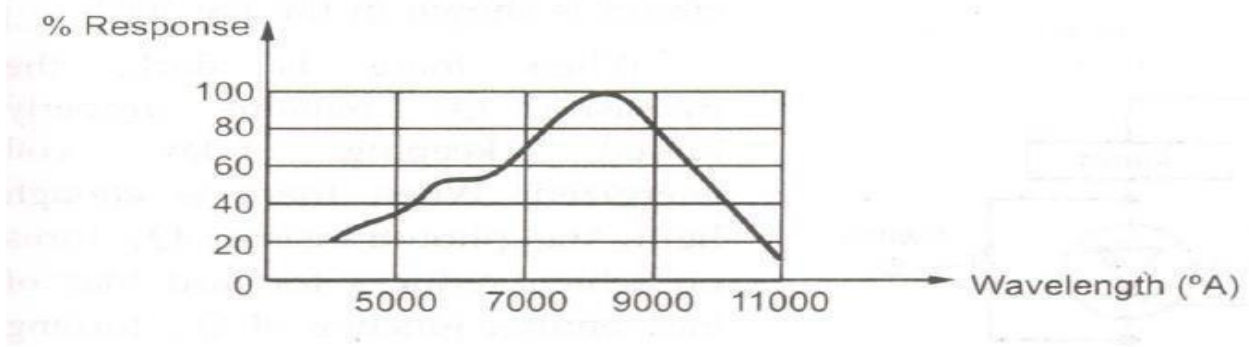

Spectral response

Each curve on the characteristic graph is related to specific light intensity. The collector current level increases corresponding to increase in the light intensity. In most of the applications the phototransistor is used as a two lead device. The phototransistor is not sensitive to all the light but sensitive to light within a certain range. The graph of response against wavelength is called spectral response. A typical spectral response is shown in the Fig.